MG-iP-

TDM Over IP Gateway

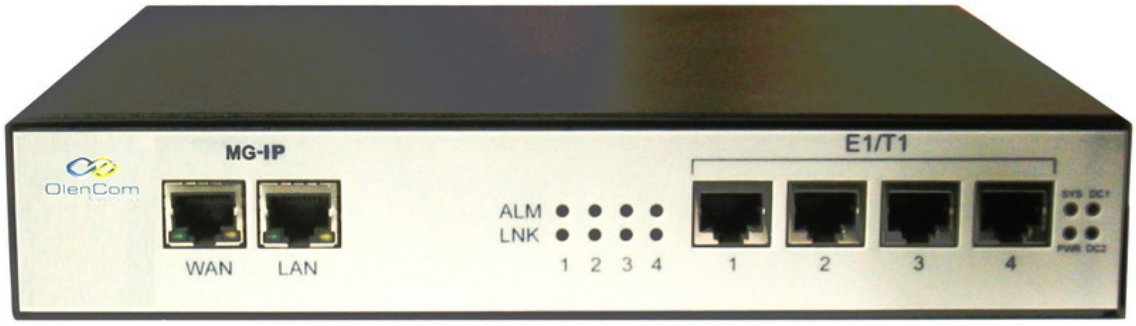

October 2006

MG-IP Reference Manual

Notice Page

Release Information

Date	Rev.	Change Level	Comments	Catalog No.
June 2006	3.3.0	Firmware version 3.3.0	Revised with additional information on CLI, RCP, and other subjects	DC-RM-MG-IP-1/MG-IP-4
October 2006	3.4.0	Firmware version 3.4.0	Revised with additional information on Clock Recovery, Download Files, Corrections to a number of incorrect CLI examples	DC-RM-MG-IP-1/MG-IP-4

Contact Information

Technical Support

e-Mail: support@olencom.com

OlenCom ltd. Web Site

www.olencom.com

About this Document

The MG-IP-1 and MG-IP-4 units are fully integrated TDM over Packet (TDMoP) gateways that multiplex T1/E1 circuits and 100 Mbps user Ethernet data ports onto any standard Ethernet/IP network or link. The units support rapid design of standards-compliant TDM over packet circuit emulation equipment. They can be used in standalone applications or in hosted environments. The MG-IP-1, which supports a single E1/T1 port only, is targted as a CPE device and is limited to a single pseudowire session, while the MG-IP-4 provides support for 4 E1/T1 ports and may be configured as an aggregator, aggregating multiple pseudowires opposite multiple MG-IP-1 devices. This document describes the functionality, pinout, power requirements, and management of the MG-IP-1 and the MG-IP-4. Loopback mechanisms and troubleshooting suggestions are also provided.

The MG-IP-1 and MG-IP-4 feature identical software and board layouts. All CLIs and management options are exactly the same on both modules. While many of the examples in this manual focus on the MG-IP-1, they are equally applicable to the MG-IP-4.

Further Reading

If you would like further information about the MG-IP-1 and MG-IP-4, or if you have questions not answered by these documents, please contact support@olencom.com or visit our web site at http://www.olencom.com.

Feedback

We welcome feedback on our products and our documentation.

If you have any comments or suggestions about this product, contact your supplier and give them the product name and a concise explanation.

Alternatively, you can send your feedback directly to us at support@olencom.com with the following information:

- The document title
- The document’s catalog number
- The page number(s) to which your comments refer
- Your comments

Table of Contents

List of Figures

List of Tables

1 Functional Description

Overview

The MG-IP-1 and MG-IP-4 are DTM Over IP gateway units for Ethernet/IP networks. They perform point-to-point (MG-IP-1) or point-to-multipoint (MG-IP-4) emulation of T1 or E1 synchronous circuits by incorporating TDM bitstreams into packets and transmitting them over packet-switched networks as streams of packets. These streams are referred to as pseudowires (PW). A pseudowire can transport a full TDM circuit or a bundle of time slots from a TDM circuit. A MG-IP unit at the opposite side of the network converts the pseudowires back into a TDM circuit. The TDM over-packet circuit emulation service (CES) that transforms the TDM circuit to a pseudowire and vice versa uses a dynamic jitter buffer and clock recovery to deliver consistent performance even over the variable timing of the packet network. See Figure 1 for a graphical view of a mixed MG-IP-1 and MG-IP-4 application.

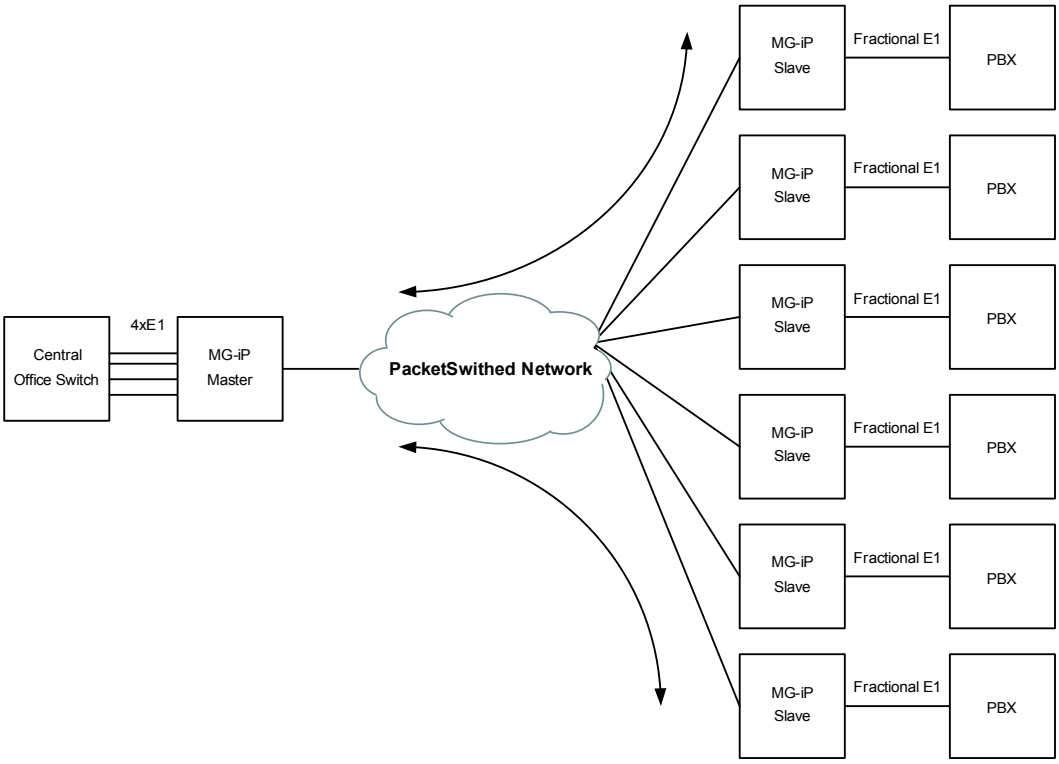

In this example, point-to-multipoint topology is used where the MG-IP-1 is the CPE device and the MG-IP-4 is configured as an aggregator, aggregating multiple pseudowire sessions opposite multiple MG-IP-1 modules. In the example, fractional T1 circuits, supporting six PBXs at different locations, are aggregated at a central location. Each pseudowire only uses the bandwidth necessary to support the needs of an individual customer, instead of a full T1. Adaptive timing is used, with clocking of the aggregator units based on the accurate timing of the Central Office. Each Slave MG-IP-1 unit performs adaptive clock recovery from the stream of packets in the pseudowire.

Circuit Emulation Service (CES)

CES refers to the process of creating pseudowires that transport TDM circuits across a packet network. Since a TDM circuit is bi-directional, the pseudowire CES process is also bi-directional. For example, at one end of the pseudowire the TDM circuit is broken down into fixed size packets; a header is added to each packet and the packet is transmitted. At the other end of the packet network, the header is removed from the packet, and a TDM circuit is re-constructed.

4xE1
Central
Office Switch
MG-iP
Master
PacketSwithed

MG-IP CES Operation

The circuit emulation can be in either unstructured or structured mode. In unstructured mode, the entire T1/E1 circuit is transferred regardless of the structure of frame and time slot boundaries. This is called “structure agnostic”. In structured mode, full or fractional frames can be packetized and transferred between MG-IP units. E1 and T1 data is structured as frames based on an 8 KHz frame sync. Each frame is divided into 8-bit time slots (32 slots for E1, 24 slots for T1). The traffic is depacketized on the other side of the packet network to recreate frames with the selected time slots in their corresponding time slot positions.

MG-IP in CES Topology

The MG-IP-1 can be configured to operate in point-to-point topologyopposite another MG-IP-1. It is limited to support a single pseudowire. The MG-IP-1 can also operate as a CPE device in point-to-multi point topology opposite a MG-IP-4 aggregator.

The MG-IP-4 can be configured to operate in point-to-point topology opposite another MG-IP-4, with support for four pseudowire sessions. It can also operate as an aggregator device in point-to-multipoint topology opposite MG-IP-4 or MG-IP-1 CPEs. The MG-IP-4 is capable of aggregating up to ten pseudowire sessions.

Fractional Operation

When a fractional TDM circuit is transported on a pseudowire only the selected time slots are sent. Even if all the voice channel time slots on a port are sent, frame synchronization is not transmitted with the voice channel data. E1 time slot 0 (zero) and the T1 F bit are not transmitted. Rather, frame synchronization is recreated at the receiving end of the pseudowire.

CAS Signaling

In structured mode, TDM circuits that use channel associated signaling (CAS) carry this information within the TDM stream. Circuits in E1 format carry this information in time slot 16. Circuits in T1 format carry channel signaling in one bit of each channel in one out of every six frames in a super frame. Signaling information can optionally be sent either through a separate pseudowire or within the same pseudowire in a separate stream so that the signaling can be inserted in the recreated TDM frame in the appropriate place according to the signal type. When fractional TDM is transported on a pseudowire, the MG-IP units utilize the minimal Ethernet WAN bandwidth required for transmitted time slots by transmitting only the selected time slots and by sending signaling out-of-stream.

Grooming

A single TDM circuit can be divided up into multiple pseudowires. A group of time slots can be sent to a port on one target MG-IP unit and another group of time slots from the same circuit can be sent to a port on the same or on a different MG-IP units.

This functionality is only applicable to the MG-IP-4 and grooming is supported only when the MG-IP-4 is configured as an aggregator.

CCS Signaling

Common Channel Signaling and other signaling methods that use a dedicated channel, such as PRI and BRI, are supported transparently by the MG-IP-1 and MG-IP-4. The dedicated channel is included in the list of time slots assigned to the pseudowire and is transmitted at all times with the voice channels. This approach assumes that each group of voice channels has its own signaling channel.

Header Options

Pseudowire packets have headers that are used to define the connection between a pair of MG-IP units. The MG-IP units support standard header encapsulation as specified in IETF-PWE3 SAToP/CESoP

and MEF-8. Three packet header formats are supported: the SAToP (structureagnostic TDM over packet) header for unstructured data, the CESoPSN (circuit emulation service over packet switched network) header for structured data and the CESoEth (circuit emulation service over ethernet) header as defined by the Metro Ethernet Forum (MEF-8) format. The CESoEth header can be used for either structured or unstructured circuits. See Packet Headers section.

All standard protocol headers include control information to be exchanged between the pseudowire peer, and provide status information such as alarms and defects occurring on the TDM interface.

Figure 2: CES Packet Format

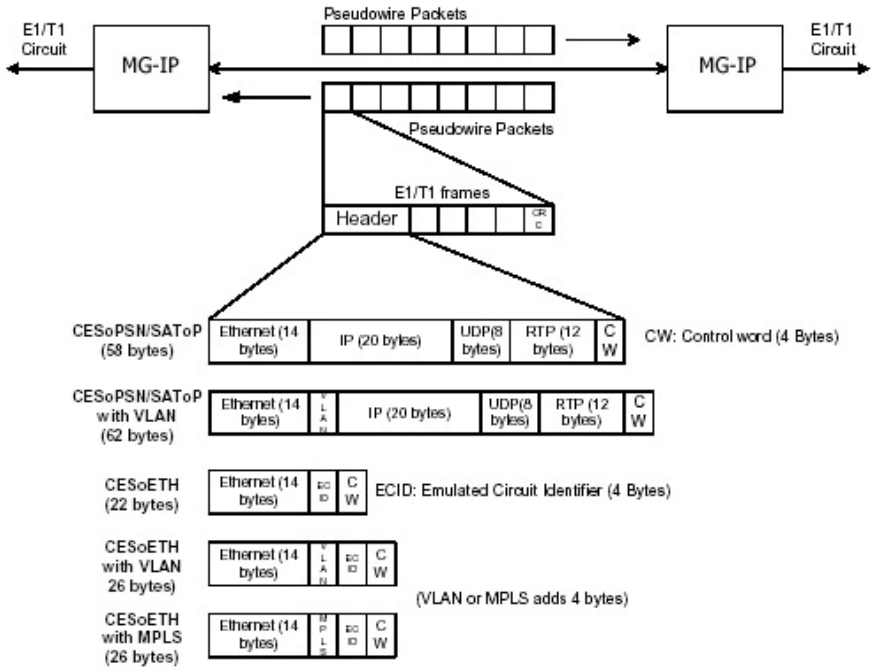

Timing Modes

The Circuit Emulation Service enables convergence and transport of TDM circuits (E1/T1) over packet-switched networks. To do so, it must feature a mechanism capable of maintaining and keeping the TDM clock synchronized between peers of a pseudowire, in order to maintain E1/T1 circuit clock continuity across the packet network, and to meet the standards of ITU G.823 and G.824.

To achieve this requirement, Olencoms' products have been designed to support a variety of timing modes, including:

- Loopback timing
- Internal timing
- External timing
- Line timing
- Recovered timing (adaptive/differential timing)
- Differential timing

Changing the timing mode will require to reset the MG-IP unit.

MG-IP units only support a Single Clock Domain. It is the customer's responsibility to feed the CES device with TDM ports, all of which are timed by the same clock source (this applies to the MG-IP-4 only).

Classic TDM Timing

As shown in Figure 3, in classic TDM clocking, the TDM clock is contained in and recovered by the TDM data bit in the received bit.

Figure 3: Classic TDM Clocking

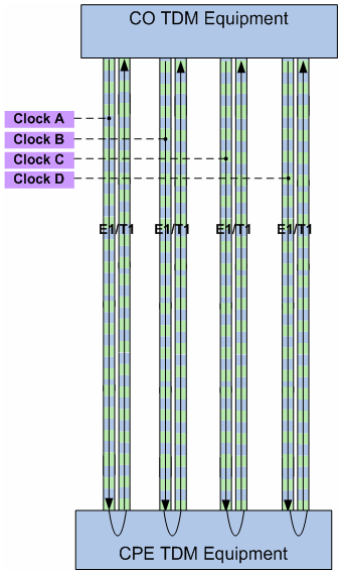

Loopback Timing

In loopback timing mode (see Figure 4), TDM ports on the MG-IP (CES device) use the clock received from the TDM equipment as a transmit clock to the TDM equipment.

In a multipe E1/T1 module (i.e. the MG-IP-4), it is the customer's responsibility to feed the MG-IP device with TDM ports, all of which are timed by the same clock source.

Figure 4: Loopback Timing Mode

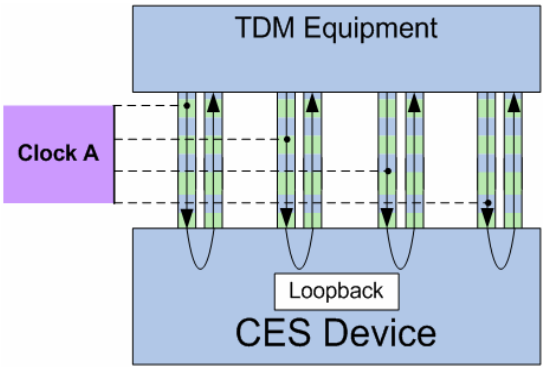

Internal Timing

In internal timing mode (see Figure 5), TDM ports on the MG-IP (CES device) use the on-board internal clock (Stratum-4 compatible local oscillator OCXO or TCXO) as a transmit clock to the TDM equipment.

Figure 5: Internal Timing Mode

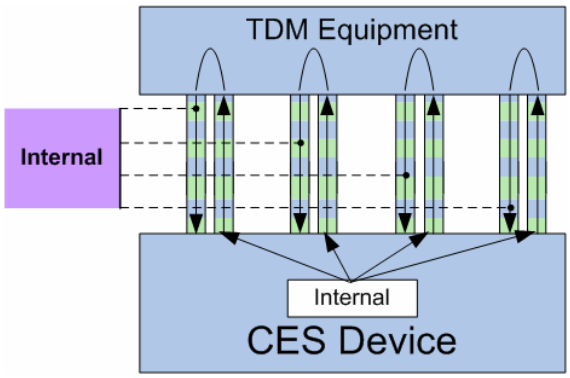

External Timing

In external timing mode (see Figure 6), TDM ports on the MG-IP (CES device) use the external clock (received through the external clock pin) as a transmit clock to the TDM equipment. The frequency of the external clock may differ from that of the T1/E1 clock, in which case the units translates and derives the TDM clock from the external clock frequency received.

If the external clock is disconnected, the MG-IP automatically switches to the onboard TCXO/OCXO.

Figure 6: External Timing Mode

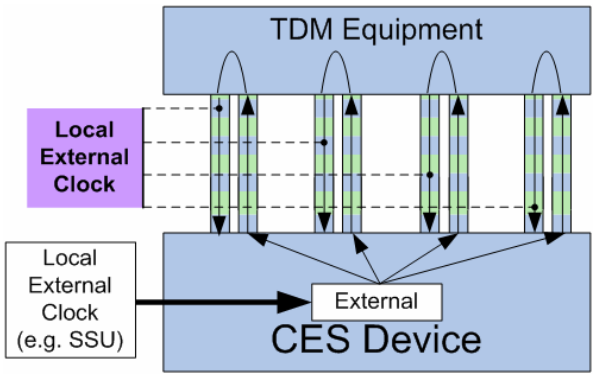

The folowing clock ferquencies are supported:

External clock frequency	Derived TDM port frequency
T1	T1
E1	E1
10.24MHz	T1
10.24MHz	E1
16.384MHz	T1
16.384MHz	E1

Line Timing

In line timing mode (see Figure 7), TDM ports on the MG-IP (CES device) use the clock received on *port 1* as a transmit clock for all ports. The clock is also exported to the external clock pin (if so configured). Should the clock on port 1 fail or the port be disabled, automatic switchover to the Free Running clock 1ppm (TCXO/OCXO) occurs. As soon as the failure condition ends, the MG-IP device

will revert to the original clock source (line timing mode is not applicable to the MG-IP-1 as it features only a single E1/T1 port).

Figure 7: Line Timing

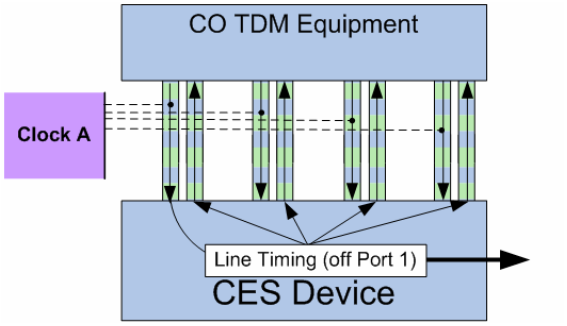

Differential Timing

Differential timing (see Figure 8) is designed to deliver the phase variations of the service clock relative to a common reference clock, so that the receiver can reconstruct the service clock by replicating these variations. This scheme assumes the availability of stratum-1 traceable common reference clock on both ends.

The sender generates an RTP timestamp based on a common reference clock, and sampled every fixed number of service clock cycles (normally equivalent to one packet size). The RTP timestamp delivers the phase information about the TDM service clock, compared to the common reference clock.

The receiver captures and analyzes the RTP timestamp, and detects the sender's frequency and phase shift.

Figure 8: Differential Timing

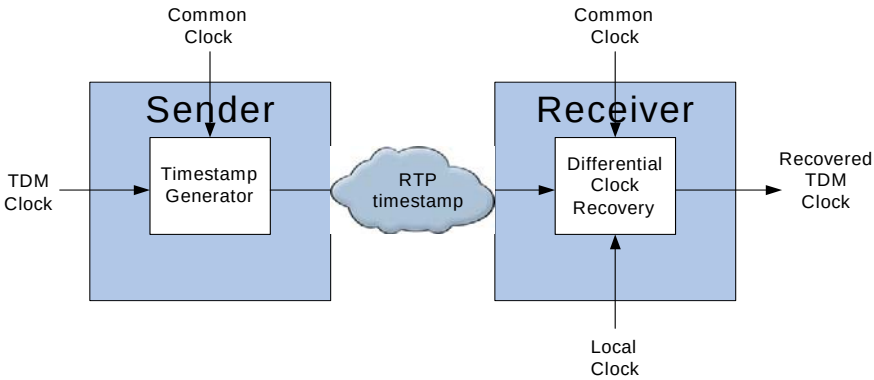

In differential timing mode, there are no logical master and slave entities. Each side of the pseudowire is a sender of a pseudowire packet carrying the RTP timestamp and performing diferrential timing clock recovery (DCR) on the pseudowire received with the RTP time stamp. As such, the limitation of a single session per port (on the "slave") is no longer valid.

The following common clock/RTP time stamp frequencies are supported:

TDM Clock	EXT Clock	RTP Time stamp	TDM Clock	EXT Clock	RTP Time stamp
T1	1544MHz	25M	E1	2048MHz	25M

	10.24MHz	10.24M		10.24MHz	10.24M
	16.384MHz	16.384M		16.384MHz	16.384M

Recovered Clock Mode

In recovered clock mode (see Figure 9), the clock is recovered from the CES packet stream received from the packet-switched network using two mechansims: *adaptive timing algorithm* or *differential timing algorithm*.

The mechanisms differ as follows: in adaptive timing, the recovery mechanism is based on the rate of the packets received from the PSN, while in differential timing, it is based on the RTP time stamp included within the packet and the existance of a reference clock on both sides of the pesudowire.

All ports are clocked according to the recovered clock of one of the sessions (PWS).

It is possible to configure a primary/secondary pesudowire. The clock recovery mechanism uses the primary pseudowire for the clock recovery algorithm and may manually be switched to the secondary pseudowire either if the primary one fails or autmatically, when the primary pseudowire is manually disabled.

The defaults primary and secondary pseudowires are the first and second created sessions, respectively. A configuration option enables switching from the primary to the secondary and vice versa.

It is possible to change the configuration of either the primary or secondary pseudowire when it is the currently active clock recovery channel. Clock recovery first switches to the backup pseudowire and, once the active pseudowire becomes the new backup pseudowire, it can be modified.

If the active pseudowire is manually disabled, clock recovery automatically switches to the alternate pseudowire, if configured and enabled (if the active pseudowire is the primary one, it will attempt to move to the secondary pseudowire, while if the active pseudowire is the secondary one, it will attempt to switch to the primary pseudowire). If no alternate pseudowire is enabled, it will switch to the internal clock.

Figure 9: Recovered Clock Mode

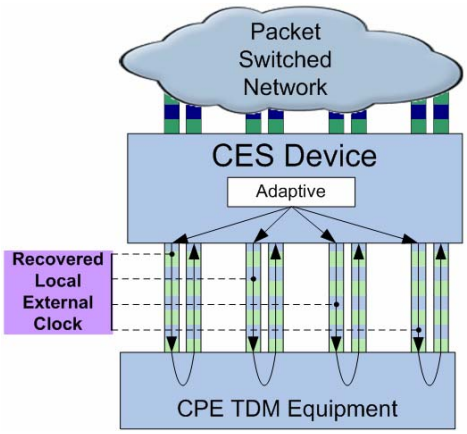

Figure 9 presents an example of a clock recovered through adaptive timing.

Adaptive Timing

Adaptive timing is applicable to point-to-point and to point-to- multipoint (aggregation) topologies. This mode defines two logical CES device configurations, as follows:

- Master – can be configured to line, external and internal timing
- Slave – is always configured to “recovered timing”

In PTMP topology, the aggregator is always the master, while in PTP topology, one MG-IP unit is the master and the other is a slave (this is arbitrarily selected).

Adaptive Timing Applicaton Configuration

The folowing sections describes possible MG-IP adaptive timing application configurations (adaptive timing is always set on the slave).

Adaptive Loopback Timing Application Configuration

In adaptive loopback timing mode (see Figure 10), the master is configured to loopback timing only if all ports are locked to the same source clock (this is the customer's responsibility and is only applicable to the MG-IP-4).

The slave is configured to recovered timing.

Figure 10: Adaptive Loopback Timing

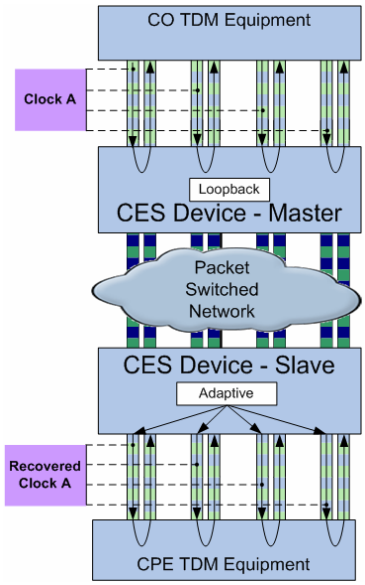

Adaptive Line Timing Application Configuration

In adaptive line timing mode (see Figure 11), the master is configured to line timing, while the slave is configured to recovered timing.

Figure 11: Adaptive Line Timing

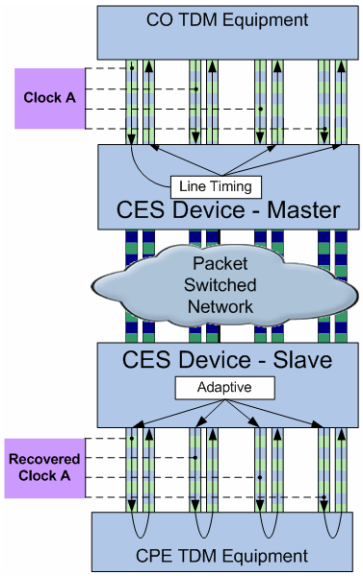

Adaptive Internal Timing Application Configuration

In adaptive internal timing mode (see Figure 12), the master is configured to internal timing, while the slave is configured to recovered timing.

Figure 12: Adaptive Internal Timing

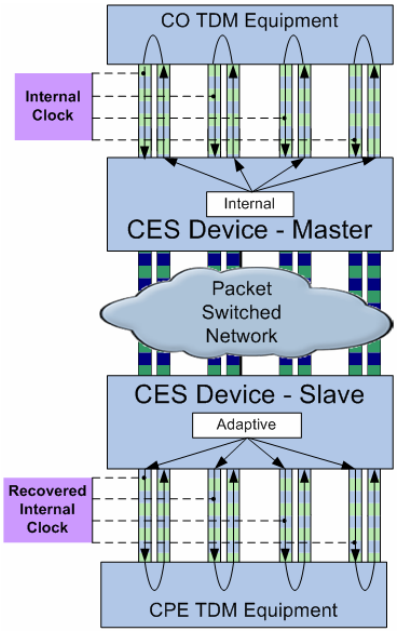

Adaptive External Timing Application Configuration

In adaptive external timing mode (see Figure 13), the master is configured to external timing, while the slave is configured to recovered timing.

Figure 13: Adaptive External Timing

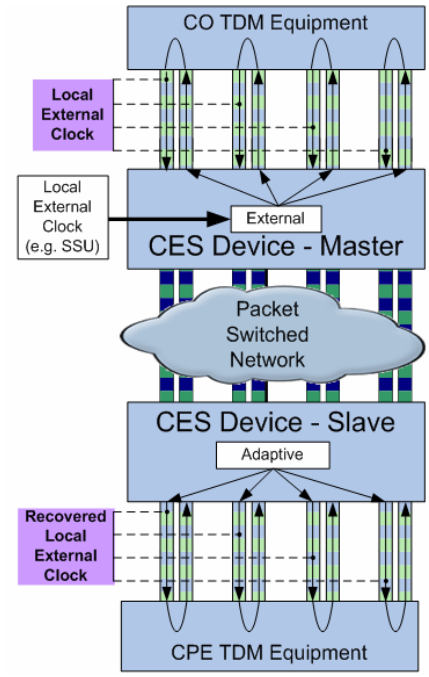

Global External Timing (Also Called Direct Timing) Application Configuration

In global external timing mode (see Figure 14), both sides acquire an accurate external clock and the TDM equipment needs be locked to this timing mode (i.e. work in loopback timing mode).

Figure 14: Global External Timing

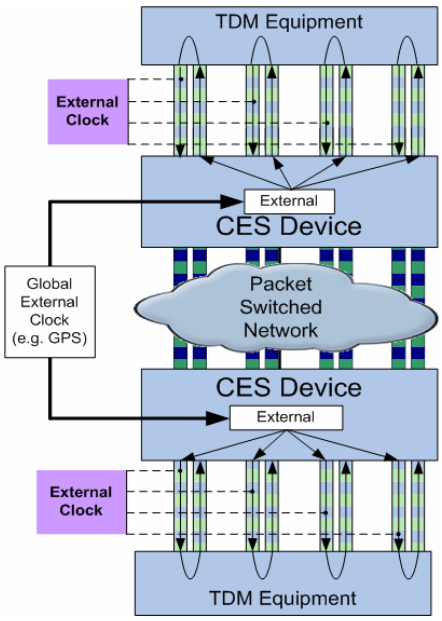

Network Timing Application Configuration

In network timing mode (see Figure 15), it is assumed that both sides of the TDM equipment are synchronized through an accurate external clock. Both sides are configured to loopback timing.

Figure 15: Network Timing Mode

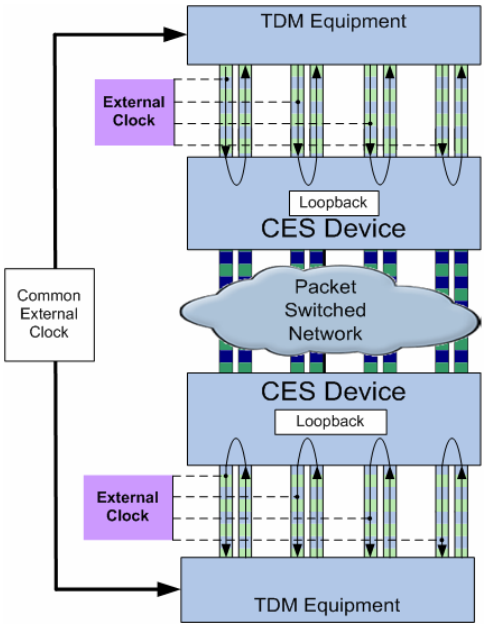

Cascading Two Modules

The MG-IP units supports "external clock in" and "external clock out" via its dedicated mini-BNC connector. Therefore, it can be configured as a TDM clock source (External Clock In). It may be used as the TDM Tx clock for all connected TDM circuits. However, it may also be configured to export the unit's clock (Clock Out). This could be used to cascade two units in a system (see Figure 16) when, for example, line timings are used.

Figure 16: Cascading Two MG-IP unitss

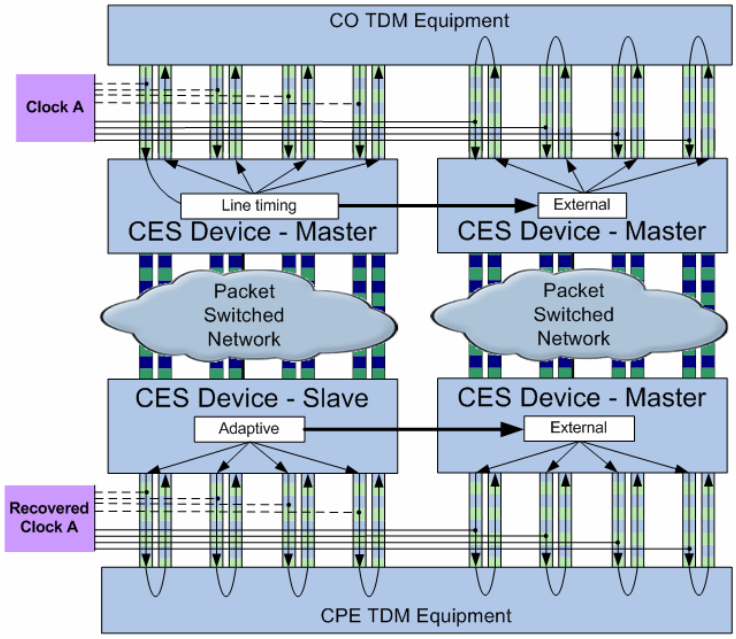

Output Clock Options

The external clock connnector may be configured to output theMG-IP's clock. For example, this may be used when cascading two units.

The exported clock depends on the mode of operation as follows:

- In case of internal timing - the onboard TCXO/OCXO clock is exported
- In case of external timing – clock export is not possible, as the same connector is used for external input
- In case of line timing – the Port 1 clock is exported
- In case of loopback timing – the Port 1 clock is exported
- In case of adaptive recovered timing – the recovered clock is exported

Recovered Timing Holdover

The holdover mechanism provides the following:

- Rapid recovery after a short service interruption/impairment (i.e. the clock is maintained until service is resumed)
- Compliance under traffic modulation (this will be supported in future releases of the product)

The following are examples of possible triggers to adaptive timing holdover:

- Link disconnects
- Remote TDM disconnects
- Protection switching on TDM
- Protection switching on PSN
- PSN network route change: (delay changes)
- Adding switch/router to the network
- Remove switch/router from the network
- Dynamic flow route change (i.e. bandwidth-related)

This holdover is only applicable on recovered mode.

Packet Delay Variation (Jitter) Buffer

As pseudowire packets traverse the packet network, the delay varies from packet to packet. This is especially evident in wireless networks that may forward packets in bursts. To compensate for this packet delay variation (PDV), the MG-IP uses a jitter buffer, which can be sized according to the maximum PDV of the network in order to avoid underrun and overrun conditions. A high network PDV requires a long jitter buffer, which translates to delay of the T1/E1 stream. The module status displays the current jitter buffer length as well as its maximum and minimum values.

Packet Reordering

A pseudowire packet sent over a complex network with different routes to the destination may arrive ahead of a previous packet. The MG-IP-1 and MG-IP-4 reorder the received pseudowire packets automatically, based on a sequence number in the received packets. If a packet arrives so late that it misses its transmission time to the TDM circuit, a filler packet will be sent to the T1/E1 circuit and the late packet will be dropped. Module status reports the number of filler packets and dropped packets.

Interfaces

The MG-IP-1and MG-IP-4 has the following interfaces:

- Two network interfaces, WAN and LAN, located on the front panel.

- LAN/Management Port – for out-of-band management, and bandwidth control LAN interface.
- One or Four T1/E1 interface.
- One console interface.
- One External Clock interface.
- One power jack, either AC (external power adapter) or DC single/redundant (Block Terminal)

The MG-IP has a built-in T1/E1 framer/LIU. The T1/E1 interface can be connected to standard T1/E1 equipment via the external connectors.

The MG-IP multiplexes the LAN Ethernet traffic and the pseudowire for transmission to the WAN. The traffic is transmitted so that the pseudowire has priority over forwarded LAN traffic (default priority is 0x5). The maximum bandwidth of the LAN and the WAN interfaces are configurable to support limited bandwidth applications. Pseudowire and other traffic received on the WAN interface is demultiplexed and output through the LAN interface and the T1/E1 interface. Certain data packets, such as management packets, are processed locally on the MG-IP, and therefore are not forwarded to other interfaces.

Figure 17: MG-IP-1 Interfaces

Figure 18: MG-IP-4 Interfaces

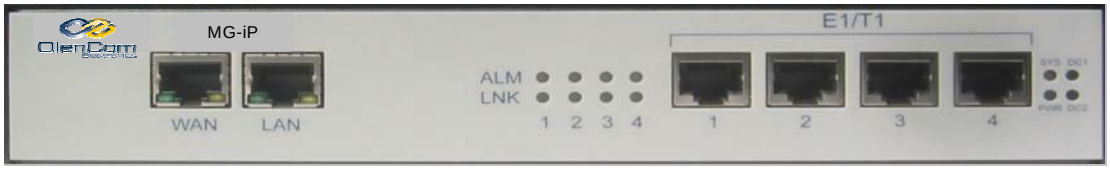

IP Address Configuration

MG-IP units offer three options for configuring IP addresses for the two Ethernet ports (WAN, LAN/Management (located on the rear side):

- **Static IP address: (This is the factory default setting**) the user defines the IP address for each port. The IP address can be
- The same value for both ports
- Different values if the ports are on different sub-nets, and for out of band management
- **TCP/IP Disabled**: The port does not support IP traffic at all. This will be the case, for example, when using CESoETH headers on pseudowire streams.
- **IP configured Dynamically**: The IP address for a port is configured dynamically at power up using a DHCP client. At power on, the embedded DHCP client sends a request for an IP address and default gateway for each dynamically configured port. TDM traffic will not start to flow until IP addresses are received for the dynamically configured ports. The user must ensure that there is a DHCP server available to respond to the DHCP client request for an IP address.

Each Ethernet port can be configured independently, using the sic command line interface (CLI) command. This command selects the option and sets the IP address and sub-net mask if the static IP option was chosen.

The “set default gateway” CLI command is effective only if the static option was chosen.

The LAN and WAN GetConfiguration (gc) CLI command shows the selected mode. When the dynamic configuration option is selected, the LAN and WAN GetStatus Command shows whether the product is waiting on receipt of an IP address from a DHCP server before starting operations

Note that the MG-IP units perform neither routing, VLAN switching of traffic. Traffic received on the rear LAN port not addressed to the MG-IP is forwarded to the WAN. Similarly, traffic received on the WAN is forwarded without change to the rear LAN port

WAN IP Configuration Limitations

When DHCP is active on the WAN port, LAN port and WAN port IP addresses must belong to different subnets. However, a configuration option is provided that allows both IP addresses to be identical (shared IP).

When attempting to configure a LAN port IP address after DHCP is answered, the LAN IP address configuration will be checked against the DHCP IP address. If they belong to the same subnet and are not identical, a warning is printed yet the command will succeed.

If the LAN IP address is already configured on boot, when the DHCP answer is received, it will be checked against the LAN IP address. If they are not identical and reside on the same subnet, the system will reboot.

DHCP Option Support

The DHCP protocol allows the DHCP client running on MG-IP units to request additional information beyond the IP address. MG-IP units utilize numerous DHCP options to automatically acquire CLI script configuration files or new firmware.

Table 1 describes the DHCP options supported and system behavior in case of missing/illegal options or failures during the use of these options.

Table 1: Supported DHCP Options

DHCP Field/Option	Behavior if Missing/Incorrect	DHCP Option	Comments
IP address	Return to DHCP discovery	This attribute is expected to be received in the “yiaddr” DHCP field	If the LAN is configured with static IP and the DHCP IP address received is on the same subnet but not identical, the system will send swerr + unsolicited and return to DHCP discovery. If the lease time expires, the system will send Syslog and reboot
Default gateway	Return to DHCP discovery	Router (option 3)	
Subnet mask	Return to DHCP discovery	Subnet mask (option 1)	

DHCP Field/Option	Behavior if Missing/Incorrect	DHCP Option	Comments
TFTP server IP	This field is optional	TFTP server name - (option 66). This attribute is expected to be received in the “siaddr” DHCP field	If the configuration file name was received, the TFTP server IP should be received as well, otherwise the system will send swerr + unsolicited messages (no Syslog) and return to DHCP discovery
Config file path	This field is optional	Bootfile name (option 67). This attribute is epxected to be received in the “file” DHCP field	The file name must end with a TXT extension for CLI scripts or TLV files. If the file extension is not supported, or if the TFTP download of the file fails, the system will send a Syslog message and reboot. In case of an error in file processing, provisioning will end with an error indication (but with no reboot)
Syslog server	This field is optional	Log server option (option 7)	If this field is set, Syslog messages indicating errors or success will be sent to it during the provisioning process.
Server identifier	This field is optional	Server identifier (option 54)	

Reboot due to problems associated with DHCP or DHCP option processing will occur after a delay of a few seconds, and a periodic error message (unsolicited) will be displayed with a description of the error and the time left until the imminent reset.

Configuring the DHCP Server

To support the above options, the DHCP server should be configured as follows:

- Router Option - specifies default gateway IP address (option 3)
- Log Server Option - specifies Syslog server ip address (option 7)
- Server Identifier - specifies DHCP server IP address (option 54)
- Subnet Mask - specifies host’s subnet mask (option 1)
- Bootfile name (option 67)
- TFTP server name - specifies the TFTP IP address (option 66)

Functional Block Diagram

The following figures present functional block diagrams of the MG-IP-1 and of the MG-IP-4.

Figure 19: MG-IP-1 Functional Block Diagram

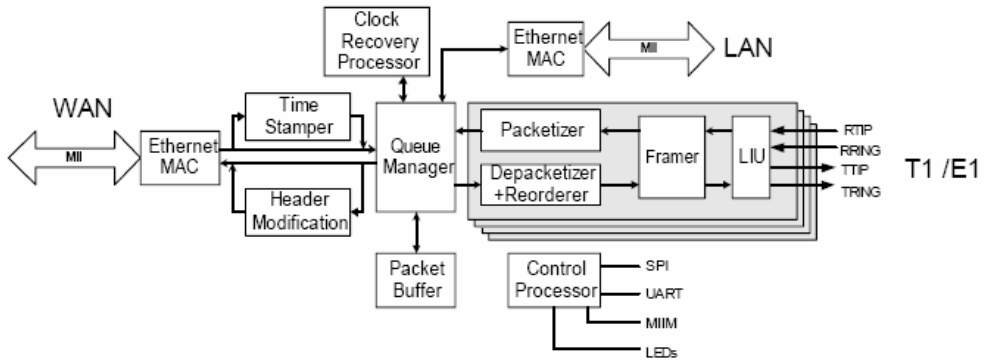

Figure 20: MG-IP-4 Functional Block Diagram

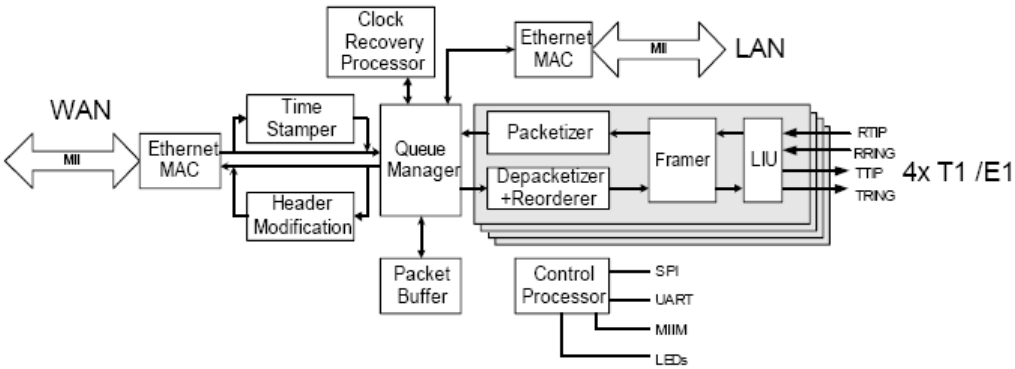

T1/E1 to Packet

The T1 or E1 circuit is detected by the LIU and converted from an analog to a digital bitstream. The framer detects frame boundaries and passes complete frames to the packetizer. The packetizer accumulates bytes until the defined pseudowire packet size is reached. The packet is then queued for transmission. When the packet is ready for transmission, a special header is added and the packet is transmitted via the WAN interface.

Packet to T1/E1

Packets received on the WAN interface with special headers are placed on a queue, where the de-packetizer/reorderer extracts T1/E1 frames from the packets in the order they were sent. The queue serves as a jitter buffer to adjust for varying arrival times of the incoming pseudowire packets. Frames are sent to the framer for transmission under control of a transmission clock either derived from the local Rx clock (Master) or recovered from the received packetized data (Slave).

LAN to WAN

Packets received from the rear LAN/Managemet interface are queued for transmission and sent with a lower priority than pseudowire data. The bandwidth of LAN traffic transmitted via the WAN interface can be limited by setting a limit on the LAN traffic bandwidth transmitted through the WAN port.

LAN Bandwith Management Guidelines

Given the network bandwidth limit of the PSN (packet-switched network) connected to the WAN port, LAN port bandwidth should be calculated and limited (using the **cel** CLI command) so as not to affect CES flow. For example, if the PSN bandwidth is assumed to be 10 Mbps and the MG-IP-4 uses four full E1/T1 connections (which add up to 9 Mbps required for CES flow), the LAN port bandwidth limit should be set to 1 Mbps.

To calculate the exact bandwidth required for the TDM CES flow (after the port and sessions have been configured), use the Config\TDM_Over_Packet>ggc CLI command and observe the “Enable session BW” and the “Disable session Bandwidth” fields. Add 1.8 Mbps overhead to their values. LAN limitation is available only on the REAR LAN interface which marked as "LAN/Management". In case you need to limit the front LAN interface it can be done only via the EEPROM.

The flow of pseudowire packets between two MG-IP units requires a dedicated bandwidth guarantee to maintain an error-free circuit emulation service.

MG-IP units provide several methods of prioritizing pseudowire traffic:

- The bandwidth limitation of LAN traffic through the WAN as described above
- Assignment of VLAN 802.1p and VLAN priority to the traffic transmitted through the WAN, which can be used by the PSN network to provide a higher priority to the pseudowire

However, it is the network manager’s responsibility to configure the network in such way that each pseudowire has the necessary bandwidth and priority to ensure timely arrival of CES packets.

WAN to LAN

Packets without special headers received on the WAN interface are queued for transmission on the LAN/Management interface. In case you don't need any bandwidth limitation, use the front LAN interface which is not passed via the main proccessor, and transferred via internal switch directly to the LAN interface.

Ethernet Configuration

The MG-IP Ethernet ports may be configured as specified by the 802.3xx standard. However, although WAN configuration can be performed in various modes, the user should always configure the WAN port with 100Mbps Full duplex and not any other configuration, as these options conflict with internal switch requirements and may couse performance degradation. Also WAN port PHY mode should be OFF. LAN port configuration can be changed, but must have PHY address set to 5 at all time.

Control Processor

The control processor detects activity on the UART and processes CLI commands received from the UART. Telnet sessions addressed to the module IP address are also processed by the control processor. The control processor reports status via the LED interfaces. It also sends unsolicited messages to report alarms or changes in interface status and manages SNMP communications.

UART

The UART is used for management and control information. The application firmware can be reprogrammed and the configuration database can be modified through the UART.

LED Interface

Interface activity and system status can be monitored using the LED interfaces.

MG-IP Configuration

The following section provides an overview of MG-IP configuration. There are a number of ways to define or modify the unit configuration:

- The Command Line Interface (CLI) is accessible using the UARTs or via Telnet over either the LAN or WAN interface. The CLI can modify the parameters in the module configuration database.
- CLI script files – CLI commands grouped into a CLI script file, a text file edited and located offline on the user's PC. The script file is aumatically copied and processed via TFTP (see CLI Script Files section)
- SNMP – standard SNMP V2 is used for Get/Set and Trap operations (see SNMP Support section)
- TLV files – TLV files comply with the CableLabs standard and are binary files (type, length, value) containing SNMP commands. TLV files are located remotely, copied via the TFTP protocol and activated on MG-IP startup (see TLV Files section).

Pseudowire Sessions

The pseudowire between two MG-IP units is defined with a TDM over packet session. A session defines the source TDM port, the format of the pseudowire packet, the maximum jitter, the header format, and the address of the target MG-IP. The target MG-IP requires a corresponding session definition.

Configuration Database

MG-IP units are configured using a configuration database that is stored in on-board Flash memory.

Many database parameter changes take effect only when a modified database is saved as the new startup database and the module is restarted. Session definitions are an exception to this. After changing the parameters of a session and saving them, the session can be disabled and then re-enabled. The session will resume using the new parameters.

Many port configuration parameters can also be changed without requiring a module reset. The following is a list of the configurable parameters contained in the configuration database:

WAN

- Interface IP mode (Static, DHCP or none)
- Interface IP and subnet mask
- Auto-negotiation enable/disable
- Auto-negotiation advertising values
- MII Clock source (DTE, DCE)
- Flow control on/off
- Bandwidth limit (0 to 100 Mbps or unlimited)

LAN/Management (rear panel)

- Interface IP mode (Static, DHCP or none)
- Interface IP and subnet mask
- Auto-negotiation enable/disable
- Auto-negotiation advertising values
- MII Clock source (DTE, DCE)
- Flow control on/off
- Bandwidth limit (0 to 100 Mbps or unlimited)

T1/E1 Interface

- Line format: T1/E1
- Clock selection (Loopback/Recovery/Internal/External)
- Transmit clock polarity
- Receive clock polarity
- LIU Line code
- LIU Line buildout
- LIU Receive equalizer gain limit
- LIU Internal receive termination
- Signaling mode
- Per-interface SNMP enable/disable line status trap
- Target IP address
- Maximum jitter
- Payload length
- Clock accuracy
- Clock locking range
- Selected time slots for n x 64 operation
- Header format - SAToP/CESoPSN, or CESoEth
- Header port numbers, Ethertype, IP TOS
- VLAN ID
- Target MAC address
- ECID
- MPLS labels

Serial Connection (UART)

- Baud rate
- Mode of operation

SNMP

- Request manager port number.
- Request managers
- Trap destination port number

- Trap manageres
- MIB2 system object parameters: name, description, contact, and location

TDM over Packet Application

The TDM over Packet CES application takes the E1 or T1 circuit received on the T1/E1 port, packages it into pseudowire packets, adds a special header, and transmits the packets via the WAN, according to the session definition. The application also receives the pseudowire packets, unpacks the data and transmits it to the E1 or T1 circuit via the T1/E1 ports.

Packet Headers

There are three packet header formats: the SATOP (structure-agnostic TDM over packet) header for unstructured data, the CESoPSN (circuit emulation service over packet switched network) header for structured data, and the CESoEth (circuit emulation service over Ethernet) header as defined by the Metro Ethernet Forum (MEF-8).

- SATOP
  The header format complies with the IETF PWE3 SAToP standard for unstructured TDM over packet switched networks (Figure 21). The protocol is routable and can be configured to use a VLAN to improve priority of the tunnelled traffic. The figure shows only the RTP portion of the header plus the SATOP control word. The header requires 62 bytes per packet, Ethernet, IP, UDP and RTP headers and the SAToP control word.

Figure 21: SATOP Header

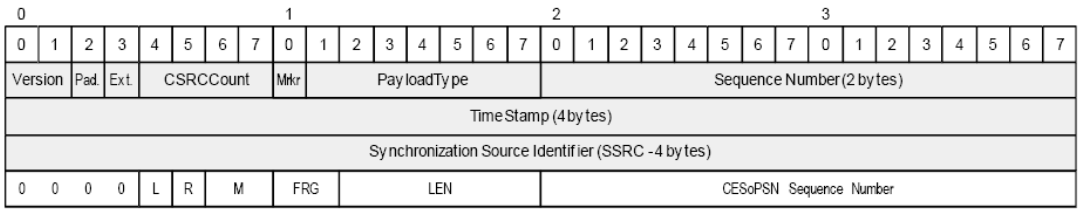

- CESoPSN
  The header format complies with the IETF PWE3 CESoPSN standard for structured TDM over packet switched networks (Figure 22). The protocol is routable and can be configured to use a VLAN to improve priority of the tunnelled traffic. The figure shows only the RTP portion of the header plus the CESOP control word. The header requires 62 bytes per packet, including Ethernet, IP, UDP and RTP headers and the CESoPSN control word.

Figure 22: CESoPSN Header

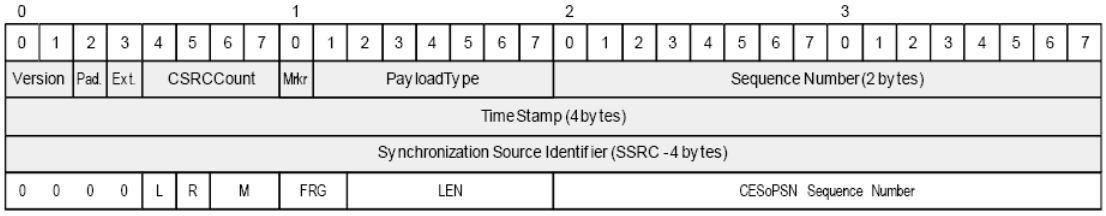

- CESoEth
  The header complies with MEF-8: “Implementation Agreement for the Emulation of PDH Circuits over Metro Ethernet Networks” (Figure 23). It supports both unstructured and

structured pseudowires. The header consists of an Ethernet header, an emulated circuit identification (ECID), and a CESoEth control word, for a total of 22 bytes. A VLAN or an MPLS label can be added in front of the header. Since MEF communications assumes only layer 2 operations, an ARP (address resolution protocol) message cannot be used to locate peer MG-IP units based on their IP address. Therefore, sessions defining pseudowires using the CESoEth need to have the destination MAC address defined explicitly using the appropriate CLI or RCP command. Similarly, ECIDs and MPLS labels are user-provided. The product does not communicate directly with an MPLS label server.

Figure 23: CESoEth Header

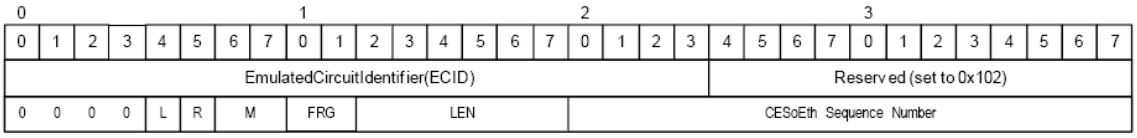

- The RTP header is optional in all encapsulations
- Backwards compatibility issues:
- The behavior of RTP header existence differs from that of former versions
  - In previous versions, RTP was always on (CESoP/SAToP), while in this release, it is disabled by default. As such, when working with this release opposite earlier releases, the RTP header must be enabled
  - In differential timing mode, the default is “enabled"

CAS Signaling with CESoPSN and CESoEth Headers

CAS signaling is performed out-of-stream from the remainder of the data. It may be sent via a separate pseudowire or within the same pesudowire, but in a separate stream.

MG-IP units implement the IETF PW3 draft standard for out of stream CAS signaling. When MG-IP units detect a signaling change in time slot 16 (E1) or in the robbed bit of a time slot (T1), they send an additional packet to peer MG-IP units receiving the pseudowire containing that time slot. The message contains the current state of the signaling bits for each time slot included in the pseudowire. The signaling message is sent three times on approximately 5 msec intervals. If another signaling change is detected for one of the timeslots included in a particular pseudowire before three messages were sent, additional messages are sent until three identical messages in a row have been sent. A signaling packet is sent every five seconds when no signaling changes are detected.

When sent in a separate stream, the signaling message has the same header as packets containing TDM data, except that both M bits are set, indicating that it is a signaling packet. The payload of a signaling packet is four bytes for each time slot included in the pseudowire. The first byte of the four contains a hex 9 followed by the ABCD bits for the corresponding timeslot. The rest of the bytes have a value of zero. See Figure 24. The packet is padded out to the minimum packet length of 64 bytes if necessary.

Figure 24: Signaling Packet Format

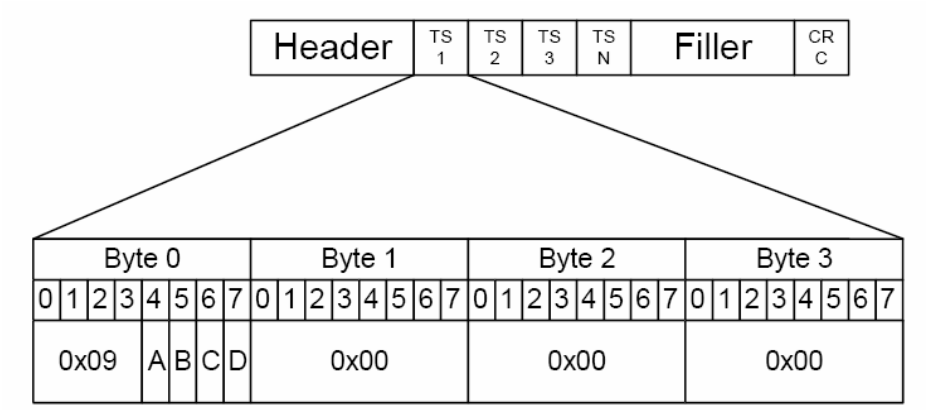

MG-IP configuration supports one protocol at a time and mixing of PSN headers is not allowed. In other words, CES sessions may be either SAToP, CESoPSN or CESoETH sessions, with no mixing allowed

Jitter Buffer/Underrun/Overrun

As packets traverse the packet network, the arrival delay varies from packet to packet. To accommodate this packet delay variation (PDV), the MG-IP uses a jitter buffer, whose main purpose is to smooth out variation in CES frame arrival time. Data is played out of the jitter buffer onto the TDM service at constant rate. The delay through this buffer needs to be as short as possible, in order to reduce TDM service latency, but long enough to absorb known variation in the network packet delay (PDV).

The MG-IP supports a jitter buffer that can be sized according to the maximum PDV expected for the specific network in order to avoid under run and overrun conditions.

- An “overrun” condition occurs when the jitter buffer cannot accommodate the newly arrived packet due to insufficient storage space. Packets are then discarded and counted as overrun packets.
- An “underrun” condition occurs when there is no correctly received CES payload ready to be played out on the TDM interface, and filler packets are played out instead. This may occur due to a frame getting lost on the Ethernet network, or discarded due to error conditions.

Typically, in order to minimize end-to-end delay, the maximum jitter is set to the lowest value possible, given the conditions of the network. Based on this value, a number of packets received over the network are buffered before bitstream transmission begins.

The number of packets in the jitter buffer is calculated based on the maximum jitter in milliseconds and the packet payload length. For example, with a packet payload of three frames on an E1 circuit, one packet is transmitted every 375 microseconds. If the maximum jitter setting is 10 milliseconds, the MG-IP will create an initial 27-packet backlog (10 msec/.375 msec = 26.6).

While setting the jitter buffer size, the user configures the normal jitter buffer operating point. This configuration should correspond to the previously measured PDV of the network.

The entire size of the jitter buffer will actually be larger than that, to accommodate larger latencies that occur from time to time. However, this situation is not recommended as, should the delay last longer than the total size of the buffer, it will eventually lead to discarded packets that will overflow this size.

In a low-PDV environment, the jitter buffer will vary in length by only one or two packets. If the maximum jitter setting matches the network PDV, the maximum and minimum jitter may vary by a larger span. Underrun and overrun occurrences indicate that the MG-IP parameters should be adjusted. See Using the Get Status Command to Evaluate Performance on page 168.

To support the clock recovery calculation, the application buffers a minimum of 1.5 packets. With the three-frame-per-packet example above, this represents less than 1 millisecond of delay, which falls within the minimum jitter setting.

It is possible to configure the Jitter Buffer to a minimum of 1 * packet_length. However, to guarantee error-fee flow, we recommend a minimum settingg of 1.5 * packet_length.

Table 2 shows the relationship between frames per packet and the valid jitter buffer size.

Table 2: Frames Per Packet vs. Jitter Buffer Size

No. of Frames in Payload	Max. Jitter Range (msec)
2 to 5	1 to 200
6 to 10	2 to 200
11 to 16	3 to 200
17 to 21	4 to 200
22 to 26	5 to 200
28 to 32	6 to 200
34 to 36	7 to 200
38 to 42	8 to 200
44 to 46	9 to 200

Replacement Frames and Packet Reordering

Another cause for “underrun” is due to a packet getting delayed or lost in the packet network. This condition is detected based on sequence numbers in the packet headers. If a packet with the right sequence number is not available at the right time, a packet’s worth of TDM frames made up of a filler pattern is sent in its place. If the packet eventually arrives late, it will be discarded. “Late” in this context means later than twice the maximum jitter setting. MG-IP units perform packet reordering automatically.

Jitter Buffer Operation

Figure 25 describes jitter buffer operation.

Figure 25: Jitter Buffer Operation

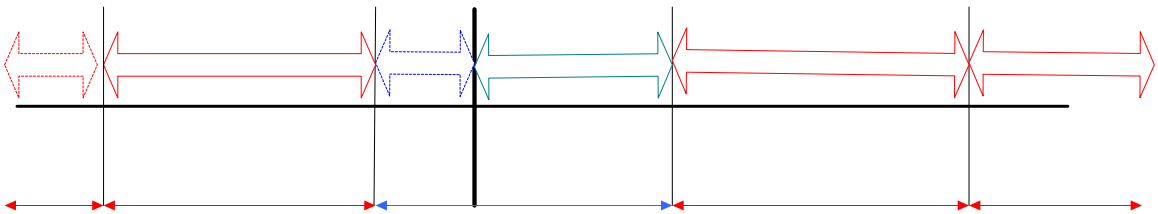

- Late Ethernet packets: the number of packets that arrived after their scheduled playout time, although the jitter buffer may not necessary be full. By the time they arrived, a filler packet was already delivered instead. These packets are effectively discarded. See MEF-8 Section 6.6.3.

- Underrun Ethernet packets: the jitter buffer underrun condition occurs when there is no correctly received ToP payload ready to be played out on the TDM interface, and filler packets are played out instead. This may occur due to frames getting lost on the Ethernet network, or discarded due to error conditions.
- Overrun Ethernet packets: the jitter buffer overrun condition occurs when the jitter buffer cannot accommodate the newly arrived packet in its entirely (e.g. due to insufficient storage space).
- Invalid Sequence Ethernet Packets: packets with sequence numbers completely outside the expected range. These packets are automatically discarded.

End-To-End Delay Calculation

The end-to-end delay of a CES frame can be calculated as follows:

End-to-End delay = (Packetization Delay + Tx Processing Delay) + Constant Network Delay + (Maximum Jitter Buffer Delay + Rx Processing Delay)

- Packetization Delay - 0.125 milisecond * number of frames configured (payload size)
- Tx Processing Delay - depends on the configuration and will always be shorter than 1 ms.
- Constant Network Delay - Constant delay of the network. Varying delay (or delay variation) will be absorbed by the jitter buffer.
- Maximum Jitter Buffer Delay - The size of the preset maximum jitter buffer
- Rx Processing Delay - depends on the configuration and will always be shorter than 1 ms.

Bandwidth per Pseudowire

The amount of bandwidth required by a pseudowire drops as a function of the number of frames encapsulated in each packet. More frames per packet payload means fewer packets per second, and therefore fewer packet headers.

Table 3 lists sample network bandwidth requirements for different packet payload sizes when the data is unstructured.

Table 3: Bandwidth Requirements (SATOP Header)

Line Format	No. of Frames Per Packet	Packets/Sec.	Bandwidth Required (Mbps)
E1	2	4000	4.032
	4	2000	3.040
	8	1000	2.544
	16	500	2.296
	32	250	2.172
T1	2	4000	3.538
	4	2000	2.541
	8	1000	2.042
	16	500	1.793
	32	250	1.668

Framing and Signaling Options

MG-IP units support two framing options each for E1 and T1 ports:

- E1: PCM30 or PCM31
- T1: D4 or ESF

E1 frames are transmitted from a MG-IP to its peer without time slot 0. Time slot 16 can be assigned to a session unless the TDM port is defined as PCM30. In that case, time slot 16 is used for CAS signaling and cannot be assigned to a specific session.

A T1 frame consists of 193 bits: 8 x 24 time slots plus the F-bit. The F-bit is not sent in a pseudowire. When the MG-IP is configured for T1 and the channel bandwidth is 64Kbps, all eight bits of a time slot are used for data. If the channel bandwidth is configured for 56Kbps, the robbed bit is used for channel associated signaling and is transmitted out-of-stream.

Clocks

External Clock:

Input: 1.544 MHz or 2.048 MHz clock (**LVTTL ONLY** for BNC connector). The device uses this as the TDM Tx clock (configured as input using CLI). Used either via the BNC connector, or via one of the E1/T1 interfaces. When using the BNC connector, a jumper on the internal board is used to select this external clock input. Jumper No J30 must be shorted.

Output: 1.544 MHz or 2.048 MHz TDM Tx clock used by the device loopback, or internal clock on the Master, or the recovered clock on the Slave (configured as output using CLI). Used either via the BNC connector, or via on of the E1/T1 interfaces. When using the BNC connector, a jumper on the internal board is used to select this external clock output. Jumper No J31 must be shorted.

Figure 26: External Clock Jumpers

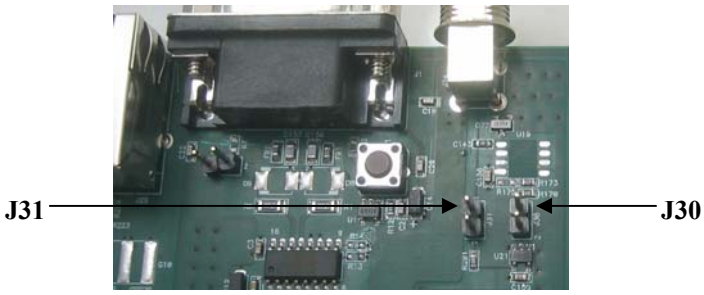

Internal Clock:

System Clock Reference: 1ppm system clock provided by the device temperature-compensated crystal oscillator (TCXO). The TCXO is sufficiently accurate to meet the ITU standards for jitter and wander.

If a more stringent standard is required, a more accurate and stable clock source can be provided by the user application. This could be an oven-controlled crystal oscillator (OCXO) with 0.05ppm (25MHz) precision or better installed on the internal board for use in systems requiring extra precision clock recovery. A jumper on the internal pigitailed board is used to select this internal clock source. See the bellow picture for PIN settings.

Figure 27: OCXO Jumper Location

LED Interface

Led indicators are according to the following table:

Figure 28: MG-IP – Front Pannel

LEDs

The MG-IP comes with the following LEDs that provide status information about traffic activity and performance of the unit.

The bellow tables describes the functionality of the LEDs

Table 4: LED Description

LED Name	Description of Function		
WAN/LAN Link LEDs	Lit when port is connected to network.		
WAN/LAN Activity LEDs	Commanded to light when a frame is transmitted from or received on the port.		
T1/E1 Link and Alarm LEDs One pair per port; only the first port is in use when the MG-IP-1 is used; the MG-IP-4 uses all four ports	**Status**	**Link LED (Green)**	**Alarm LED (Yellow/Red)**
	Port not configured or commanded down.	Off	Off
	Normal-link is up.	Green	Off
	Red alarm: framing error.	Green	Red
	Red alarm: loss of carrier.	Off	Red
	Yellow alarm.	Off	Yellow
	Blue alarm.	Green	Flashing Yellow
	Port in loopback.	Flashing green	Yellow
System Status LED	Red/Green LED. **Green**: System is operating correctly: TDM transmit and receive is operating with both the T1/E1 interface and with the peer unit. **Flashing green**: T1/E1 send or receive or communications with the peer unit is not operating correctly. Alternating red/green: Functional test in progress, with no failure. **Flashing red**: Failure during functional test. Red: Power on test failed.		
Power On LED	Green LED. Lit when power is on.		

TDM and Pseudowire Error Handling

This section describes the implementation of error handling in Olencom products' TDM and pseudowire interfaces. The document summarizes the requirements of relevant T1 and E1 standards, as well as the Circuit Emulation IETF CESOP/SATOP drafts, the Docsis BSoD and the MEF-8 PDH Implementation Agreement.

This section covers:

- TDM defects and failures
- Pseudowire defects
- Failure reporting and transfer across the network

System Overview

A simplified system diagram is shown in Figure 29 below. A pseudowire is depicted as it heads towards the TSP (TDM Service Processor) and is converted into a packet flow by the IWF (Interworking Function). At the peer device, packets are received by the IWF and converted back to the TDM interface at the TSP. A TSP may support one or more TDM interface ports (e.g. 4 x E1/T1 are supported by the MG-IP-4). Similarly, an IWF may support one or more pseudowires. A description of the mapping of TDM interfaces and pseudowires is beyond the scope of this document.

Defects and failures are detected on the TSP and IWF RX interfaces. Error conditions are signaled to the peer TDM device on the TDM TX interface by transmission of AIS, RAI or idle signaling patterns. Error conditions are signaled to the peer IWF across the PSN (Packet Switched Network) via the L, R and M bits of the pseudowire packet flow's Control word.

Figure 29: Point-to-multipoint TDM over Ethernet Pseudowire

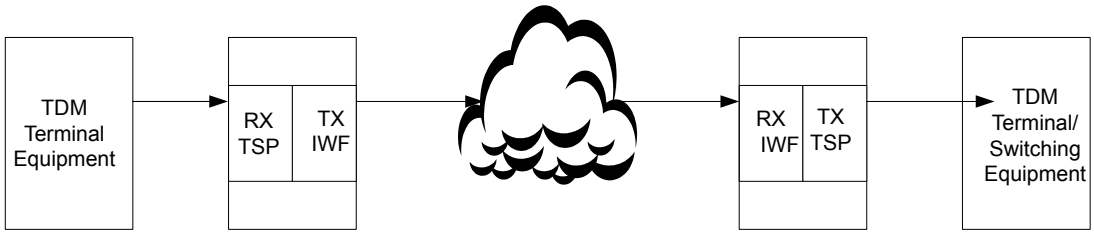

Not all of the functionality described in this section will initially be implemented in Olencom products. Some may be implemented gradually.

TDM Defects and Failures

The following defect definitions are specified in RFC3895, based on corresponding standard documents.

TDM Defects

AIS Defect

AIS defect- for D4 and ESF links, the "all ones" condition is detected at a DS1 line interface upon an unframed signal with a "ones" density of at least 99.9% being observed for a time equal to or greater than T, where 3 ms <= T <= 75 ms (in the Dallas framer, this is set to 3 ms and is not configurable)

The AIS is terminated upon observation of a signal not meeting the configured "ones" density or the unframed signal criteria for a period equal to or greater than T.

For E1 links, the "all ones" condition is detected at the line interface as a string of 512 bits containing fewer than three zero bits.

OOF (Out-Of-Frame) Defect

This defect occurs whenever errors in the incoming framing pattern are discovered. This can occur when 2 of 4, 2 of 5, or 3 of 5 framing bits are in error. A reframe clears the OOF defect. OOF is not declared when AIS is present.

For T1 links, an Out of Frame defect is declared when the receiver detects two or more framing errors within a 3 ms period for ESF signals and within a 0.75 ms period for D4 signals, or two or more errors out of five or fewer consecutive framing-bits.

For E1 links, an Out Of Frame defect is declared when three consecutive frame alignment signals have been received with an error.

Once an Out Of Frame Defect is declared, the framer starts searching for a correct framing pattern. The Out of Frame defect ends when the signal is in frame.

In-frame occurs when there are fewer than two frame bit errors within a 3 ms period for ESF signals and within a 0.75 ms period for D4 signals.

For E1 links, the Out of Frame defect is cleared when:

- In frame N, the frame alignment signal is correct, and
- in frame N+1, the frame alignment signal is absent (i.e., bit 2 in TS0 is a one), and
- in frame N+2, the frame alignment signal is present and correct

LOS Defect (Line Defect)

A LOS (Loss Of Signal) defect is declared when no pulses have been detected during a defined period of time, as follows:

- For DS1, the Loss Of Signal defect is declared upon observation of 175 +/- 75 contiguous pulse positions with no pulses of either positive or negative polarity. The LOS failure is cleared upon observation of an average pulse density of at least 12.5% over a period of 175 +/- 75 contiguous pulse positions, starting with the receipt of a pulse.
- For E1 links, the Loss Of Signal failure is declared when 255 consecutive zeroes are detected (E1RCR2.RCLA= 0)

RDI Defect

While ANSI T1.231.02-2003 does not define the RDI defect and defines only the RAI failure, ITU-T G.0775 and G.0705 distinguish between the RDI defect and RAI failure. RAI definitions will be made using the ITU-T terminology so that the final behavior of the system will comply with both ANSI T1.231.02-2003 and G.0705/G.0775.

- **RDI defect for T1 lines** - RDI definitions for DS1 lines are adopted from ANSI T1.231.02-2003, 9.1. For DS1 links, RDI defect is declared as soon as a DS1 terminal determines that it is receiving an RAI signal from the Far-End. The RDI defect is cleared as soon as the DS1 terminal determines that it is no longer receiving an RAI signal from the Far-End
- For T1 SF (D4) links, the RAI signal is sent by setting bit 2 of all DS0 channels to "0" for the entire duration (and at least for 1 second) of an LOS, LOF or AIS failure
- For T1 ESF links, the RAI signal is sent by a repeating 16-bit pattern consisting of eight "ones" followed by eight "zeroes" for the entire duration (and at least for 1 second) of an LOS, LOF or AIS failure
- RDI defect for E1 lines - RDI definitions for E1 lines are taken from G.0775, 6.1 and 6.2
- For E1 links carrying basic frame structures, a Remote Defect Indication (RDI) defect at 2048 kbit/s path termination functions is detected when the incoming signal has the "Remote alarm indication" bit set to binary ONE ("1") for z consecutive double frame periods,
  where z = 2 .. 5 and is not provisionable

- The RDI defect is cleared when the incoming signal has the "Remote alarm indication" bit set to binary ZERO ("0") for z consecutive double frame periods

The “Remote alarm indication” bit is the "A bit" in the 2048 kbit/s frame defined in 2.3.2/G.704.

TDM Failures

The following line failure definitions are specified in RFC3895, based on T.231, T.403 and G.775.

LOS Failure

An LOS failure is declared when an LOS defect persists for 2.5 (for T1) or 0 (for E1) +/- 0.5 seconds. The LOS failure is cleared when the LOS defect is absent for 10 +/- 0.5 seconds (see 4.3.1.1.1/ANSI T1.231-2003).

AIS Failure

An AIS Failure is present when an AIS defect is detected at the input for 2.5 +/- 0.5 seconds and the AIS defect still exists. The AIS failure is cleared when there have been no LOS, AIS or OOF defects for 10 seconds.

LOF Failure

A Loss of Frame Failure is present when an OOF defect is detected at the input for 2.5 +/- 0.5 seconds. The LOF failure is cleared when OOF defects are absent for 10 seconds.

RAI Failure

Remote Alarm Indication is also known as a Yellow Alarm, a Far End Alarm and a Distant Alarm. When detected, it indicates that a Red Alarm is present at the opposite link.

For T1 D4 links, the RAI failure is declared when an RDI defect is present for at least 335 ms and is cleared when bit 6 of at least one channel is not set to zero for a period of T, where T is typically less than one second and always less than 5 seconds. This rule is adopted for all other T1/E1 modes as follows: the RAI failure is present when an RDI defect is detected at the input for 0.5 +/- 0.1 seconds. The RAI failure is cleared when there have been no RDI defects for 0.5+/-0.1 seconds.

For ESF links, the Yellow Alarm failure is declared if the Yellow Alarm signal pattern occurs in at least seven out of ten contiguous 16-bit pattern intervals and is cleared if the Yellow Alarm signal pattern does not occur in ten contiguous 16-bit signal pattern intervals.

For E1 links, the Far End Alarm failure is declared when bit 3 of time slot zero is received set to one on two consecutive occasions. The Far End Alarm failure is cleared when bit 3 of time slot zero is received set to zero.

Multi-Frame Failures

For E1, multi-frame failures are detected when operating with CAS. Note that while ITU-T standards define the faults listed below as failures only, this document follows standard defect/failure terminology. This allows introduciton of integration/deintegration logic without changing the default behavior of default actions (Multiframe Remote Alarm Indication, etc.). These failures are reported in the appropriate dsx1 MIB.

Loss Of Multi-frame Failure

The Loss Of Multi-frame (LOM) defect is declared when two consecutive multi-frame alignment signals (bits 4 through 7 of TS16 of frame 0) have been received with an error. It is cleared when the first correct multi-frame alignment signal is received. The failure is also declared when CRC is enabled and the framer has lost CRC alignment.

Immediately upon detection of the LOM defect, the system should send the MRAI bit in the outgoing (to the TDM) direction to indicate that it has lost multi-frame synchronization. The MRAI bit is cleared immediately after the LOM defect is cleared.

The Loss Of Multi-Frame (LOM) failure is present when a LOM defect passes the stabilization filter of 0 seconds. The LOM failure is cleared when there have been no LOM defects for 10 seconds.

This failure is reported in the dsx1 MIB as object dsx1LineStatus bit dsx1XmtFarEndLOMF.

Far End Loss of Multi-frame Failure

The Far End Loss of Multi-frame (RLOM) defect is declared when bit 2 of TS16 of frame 0 is received set to one on two consecutive occasions. It is cleared when bit 2 of TS16 of frame 0 is received set to zero.

The Far End Loss Of Multi-Frame (RLOM) failure is present when an RLOM defect passes the stabilization filter of 0.5 +/- 0.1 seconds. The RLOM failure is cleared when there have been no RLOM defects for 0.5 +/- 0.1 seconds.

This failure is reported in the dsx1 MIB as object dsx1LineStatus bit dsx1RcvFarEndLOMF.

TS16 Alarm Indication Signal Failure (Currently Not Supported)

The TS16 Alarm Indication Signal defect (AIS-TS16) is declared when time slot 16 is received as “all ones” for all frames of two consecutive multi-frames (see G.732 Section 4.2.6). This condition only applies to E1 operating in CAS (TS16) multi-frame framing.

The AIS-TS16 failure is present when an AIS-TS16 defect passes the stabilization filter of 0.5 +/- 0.1 seconds. The AIS-TS16 failure is cleared when there have been no AIS-TS16 defects for 0.5 +/- 0.1 seconds.

The failure is reported in the dsx1 MIB as object dsx1LineStatus bit dsx1T16AIS. No other actions are taken as a result of this event.

Failure Integration/Deintegration Time

Table 5 specifies integration/deintegration time in seconds for failure declaration and clearance.

Table 5: Failure Integration/deintegration Times (Sec)

Defect	Failures	Integration Time (Sec)	Deintegration Time (Sec)
Loss of Signal (LOS)	LOS (red)	2.5	10
Out of Frame (OOF)	LOF (red)	2.5	10
Remote Alarm Indication (RAI)	RAI (yellow)	0.5	0.5
Alarm Indication Signal (AIS)	AIS (blue)	2.5	10
Loss of Multi-frame (LOM)	LOMF (red)	0.0	10
Remote Alarm Indication (MRAI)	RLOMF (yellow)	0.5	0.5
TS 16 Alarm Indication Signal (AIS)	AIS (blue)	2.5	10

PDH Fault Correlation

According to Bellcore/ITU-T requirements, any single failure (or root cause of incoming signal problems) must result in a single alarm output message only. Non-traffic-related failures may be exceptions to the "single failure/single message" criteria.

Fault correlation logic is a software filter that filters out all "non-root-causing problem" alarms and relies on the fact that most alarms are related to each other and are organized hierarchicaly.

For the purpose of alarms reporting, traffic-related failures can be divided into Near-End (i.e. LOS, LOF, AIS, etc.) and Far-End failures (i.e. RAI, RLOMF).

In general, the following rules need be applied:

- Declaration of a failure will immediately clear any existing failure from a lower level. It should also disable further declaration of any lower-level failure
- Clearing of a failure will allow declaration of lower-level failures, if conditions warrant such declaration

Table 6 defines the hierarchy of Near-End failures, while Table 7 defines the hierarchy of Far-End failuresTable 8 defines the relations and hierarchy of both Near-End and Far-End failures.

To avoid reporting of multiple traps for a single event (as a result of numerous "correlation" actions), simple stabilization logic can be implemented (for example, a trap sending routine can be scheduled to accumulate alarms for periods of 100 milliseconds). This will avoid a typical scenario of a single LOS clearance resulting in declaration and clearing of the LOF trap (inhibited by LOS).

Table 6: PDH Near-End Failure Hierarchy

Failure	Fault Correlation Action
LOS	“Declared” state will clear and inhibit declaration of all failures listed below. “Cleared” state will enable declaration and declare all relevant failures listed below.
AIS	“Declared” state will clear and inhibit declaration of all failures listed below. “Cleared” state will enable declaration and declare all relevant failures listed below.
LOF	“Declared” state will clear and inhibit declaration of all failures listed below. “Cleared” state will enable declaration and declare all relevant failures listed below.

Failure	Fault Correlation Action
AIS-TS16	"Declared" state will clear and inhibit declaration of all failures listed below. "Cleared" state will enable declaration and declare all relevant failures listed below.
LOM	None

Table 7: PDH Far-End Failure Hierarchy

Failure	Fault Correlation Action
RAI	"Declared" state will clear and inhibit declaration of all failures listed below. "Cleared" state will enable declaration and declare all relevant failures listed below.
RLOM	None

Table 8: Relations between PDH Near-End and Far-End Failures

Near-End Failure	Far-End Failure	Fault Correlation Relation
LOF	RAI	All Near-End failures including LOF and above will be assigned a higher priority than that of RAI.
LOM	RLOM	All Near-End failures including LOM and above will be assigned a higher priority than that of RLOM.

Status Indications

This section describes interface line and CES status reporting.

TDM Status Reporting

The status of the TDM interfaces is reported via the DS1 MIB line status object.

The dsx1LineStatus object reports the status of the line. Changes in line status result in SNMP traps. This variable indicates the line status of the interface. It contains loopback, failure, received alarm and transmitted alarm information. The dsx1LineStatus is a bit map represented as a sum. It can therefore simultaneously represent multiple failures (alarms) and a LoopbackState.

dsx1NoAlarm must be set if and only if no other flag is set. If the dsx1loopbackState bit is set, the loopback in effect can be determined from the dsx1loopbackConfig object. The various bit positions are presented in Table 9.

Table 9: Status Bit Settings

Bit Setting	Item	Description
1	dsx1NoAlarm	No alarm present
2	dsx1RcvFarEndLOF	Far end LOF (a.k.a., Yellow Alarm)
4	dsx1XmtFarEndLOF	Near end sending LOF Indication
8	dsx1RcvAIS	Far end sending AIS
16	dsx1XmtAIS	Near end sending AIS
32	dsx1LossOfFrame	Near end LOF (a.k.a., Red Alarm)
64	dsx1LossOfSignal	Near end Loss Of Signal
128	dsx1LoopbackState	Near end is looped
256	dsx1T16AIS	E1 TS16 AIS (currently not supported)

Bit Setting	Item	Description
512	dsx1RcvFarEndLOMF	Far End Sending TS16 LOMF
1024	dsx1XmtFarEndLOMF	Near End Sending TS16 LOMF
2048	dsx1RcvTestCode	Near End detects a test code
4096	dsx1OtherFailure	any line status not defined here
8192	dsx1UnavailSigState	Near End in Unavailable Signal State

The following events are not supported:

- dsx1NetEquipOOS
- dsx1RcvPayloadAIS
- dsx1Ds2PerfThreshold

TDM Performance Monitoring

Performance parameters are raw counts derived by the processing of performance primitives within 1-second time intervals.

The following are examples of counters:

- Errored Seconds (ESs) - count of seconds containing one or more anomalies and/or defects (for lines and paths)
- Severely Errored Seconds (SESs) - count of seconds containing more than a particular quantity of anomalies and/or defects (for lines and paths)

Generally, PM parameters are normally accumulated at quarter-hourly intervals (i.e., every 15 minutes) and are maintained in designated storage registers.

There are 96 storage registers termed:

- Current 15-minute
- 96 previous 15-minute storage registers

At the end of every accumulation interval, the current value of the performance parameter register is saved in its corresponding “previous period” register, and the current register is reset to zero.

If the time of day setting in the NE is changed, the collection of parameter counts in each of the current 15-minute interval registers continues uninterrupted, and the time associated with the current 15-minute register is changed to the new time. If this change of time lengthens or shortens the current 15-minute or current day register by more than 10 seconds, the invalid flag is set. All counts saved in the previous and recent 15-minute or daily registers are not affected by the changing of the time of day.

Previous (15-minute or day) registers, together with the corresponding recent history registers, if any, form a data structure/buffer. That is, when a new value is stored at the most recent position in the storage structure, every existing value is shifted down to the next most recent position, and the least recent (oldest) value in the structure is discarded.

Each entity has an invalid data flag for each current and stored interval, both for 15-minute and daily intervals for each direction of transmission. A flag is set to indicate that the data stored in the associated group of registers is incomplete or invalid (for that interval).

When any register capacity is exceeded, the register should not roll over but should be pegged at the maximum value and reinitialized after the data is saved in the appropriate storage register, or upon receipt of an explicit instruction from the OS or operations staff.

Figure 30: TDM Performance Monitoring

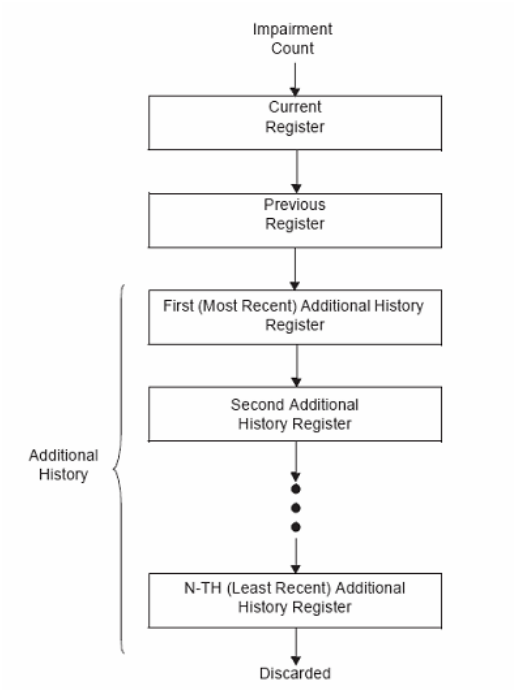

CES Status Reporting

The IWF (circuit emulation Interworking Function) detects several conditions based on arriving pseudowire packet flows. These indications are reported in the pseudowire TDM MIB as PwTDMCurrentIndications. They may lead to defects, may be counted in statistic counters and may lead to alarms.

The only currently defined CES defect failure is LOPS (Loss Of Packet Synchronization) state. When in LOPS state, the pseudowire's state is considered to be "down". When it acquires packet synchronization, the pseudowire's state is considered to be "up".

Table 10 below describes the indications (specified in the pseudowire MIB) detected by the IWF for each pseudowire based on the incoming packet flow.

Table 10: Incoming Packet Flow-based Indications

Indication	Description
strayPacket	Stray packets may be detected by the PSN and multiplexing layers. Stray packets must be discarded by the IWF and their detection must not affect packet loss detection mechanisms.
malformedPacket	Malformed packets are detected by a mismatch between the expected packet size (taking the value of the L bit into account) and the actual packet size inferred from the PSN and multiplexing layers. Malformed in-order packets MUST be discarded by the IWF and replacement data must be generated as for lost packets.
excessivePktLossRate	Excessive packet loss rate is detected by computing the average packet loss rate over the value of pwVcTDMAvePktLossTimeWindow and comparing it with a preconfigured threshold.
bufferOverrun	Buffer overrun is detected when the jitter buffer cannot accommodate newly arrived packets.
bufferUnderrun	Buffer underrun is detected when no packets are present in the jitter buffer.

Indication	Description
remotePktLoss	Remote packet loss is indicated by reception of packets with their R bit set.
pktMisOrder	Packet misorder is detected by examining the sequence number provided by the control word. A packet is considered misordered when: ▪ The sequence number of the new packet is less than the highest sequence number of a packet successfully stored in the jitter buffer ▪ The sequence number of the new packet is not the next consecutive number
packetLoss	Packet loss is detected if a packet was not received before it needed to be played out.
tdmFault	If L bit in the control word is set, TDM fault, indicates that TDM data carried in the payload is invalid due to an attachment circuit fault. When the L bit is set, the payload may be omitted in order to conserve bandwidth. In any event, replacement data is generated when the L bit is set.
LOPS	The loss of packet synchronization (LOPS) state is entered when either: ▪ A preconfigured number of consecutive packets are missing as determined by the play out of these packets or ▪ the excessive packet loss threshold is reached The LOPS state is terminated when: ▪ A preconfigured number of consecutive packets are available for play out with no error and ▪ the excessive packet loss rate falls below the excessive packet threshold value for a complete window time (AvePktLossTimeWindow)

Error Handling

This section describes how defects and failures are handled for structure-agnostic and structure-aware transport on the TDM-bound and PSN-bound (packet) interfaces.

Each CES gateway contains a defined mapping between TDM circuits and pseudowires (see Figure 31). Events detected in the TSP RX affect the IWF TX and perhaps the TSP TX. Similarly, events detected in the IWF RX affect what is transmitted by the TSP to the TDM circuits.

The data and signaling transmitted during error conditions is governed by a set of configuration settings and policies. The configuration options for both the TSP and IWF are described in detail in CES Configuration Parameters on page 53.

Figure 31: CES Gateway

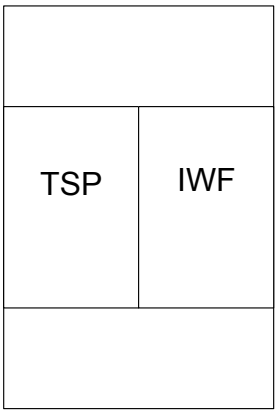

Until a pseudowire is started, the IdlePattern pattern is sent by the TSP on the TDM circuits. Once a pseudowire is operational, TDM data is regenerated based on the incoming pseudowire packet flow and is transmitted on the associated TDM circuit.

Error handling is based on standard specifications of the Circuit Emulation IETF CESOP/SATOP drafts, the Docsis BSoD and the MEF-8 PDH Implementation Agreement.

Structure-agnostic Mode

Table 11 below describes the events and actions taken when operating in structure-agnostic mode.

Table 11: Structure-agnostic Event Handling

Event	Actions
TSP RX: LOS defect or TSP RX: AIS defect (optional)	IWF TX: ▪ Sends the packet with the L bit set to 1 ▪ The packet payload may be omitted according to PaySupPolicy in order to conserve bandwidth ▪ If there are no defects, the L bit must be cleared, and the proper payload sent TSP TX: ▪ “All ones” pattern will be inserted into received E1/T1 payload on LOS detection

Event	Actions
IWF RX: Packet received with L flag set	TSP TX: ▪ If payload is suppressed, plays out AIS pattern ("all ones" for T1/E1) with appropriate amount of data on TDM circuit ▪ If payload is not suppressed, behaves according to LflagPayloadPolicy. The default is to ignore the payload and to play out the AIS pattern. Optionally, the payload is maintained and no further alarm processing is performed.
IWF RX: Packet received with R flag set	Report RemotePktLoss to PW TDM MIB
IWF RX: Missing packet detected	TSP TX: ▪ Plays out an appropriate amount of data on TDM circuit according to the PktReplacePolicy
IWF RX: PW enters LOPS state	TSP TX: ▪ Plays out AIS pattern ("all ones" for T1/E1) with an appropriate amount of data on TDM circuit IWF TX: ▪ Sends packets for this pseudowire with the R bit set
IWF RX: PW exits LOPS state	TSP TX: ▪ Plays out data from jitter buffer IWF TX: ▪ Sends packets for this pseudowire with the R bit cleared

Figure 32 below illustrates a sample LOS defect case.

Figure 32: Loss of Signal Trace Example

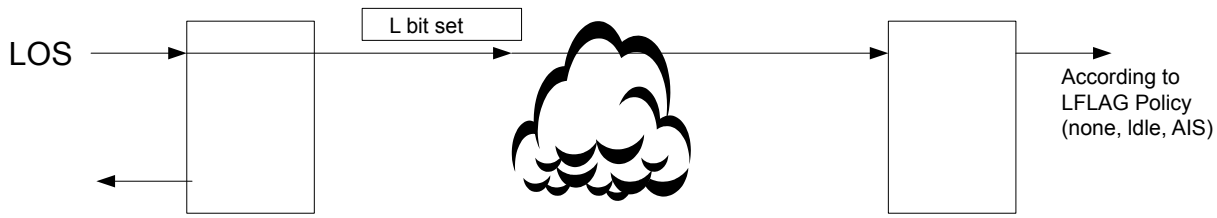

Description of events:

1. An LOS defect is detected at the TSP RX, causing a packet with the L bit set to be generated. This is received by the IWF RX, which in turn, causes the TSP TX to generate a packet according to the L flag policy.
2. At the IWF TX, it is possible to have both the L and R bits set simultaneously. This represents no conflicts.
3. At the TSP TX, the AIS pattern is played out.
4. The R flag does not affect the data to be played out.

Structure-aware Mode

Table 12 describes the events and actions taken when operating in the structure-aware mode.

Table 12: Structure-aware Event Handling

Event	Actions
TSP RX: LOS defect or TSP RX: AIS defect or TSP RX: OOF defect	IWF TX: ▪ Sends the packet with the L bit set to 1 (if there are no defects, the L bit must be cleared and the proper payload sent) ▪ The packet payload may be omitted according to PaySupPolicy, in order to conserve bandwidth TSP TX: ▪ Sends RAI, if configured for E1 operation ▪ “All ones” pattern will be inserted into the E1/T1 payload received on LOS detection. No insertions are required on OOF or AIS defects
T1 only: TSP RX: LOS failure or TSP RX: AIS failure or TSP RX: OOF failure	TSP TX: ▪ Sends RAI on attached T1 interface, if configured for T1 operation ▪ RAI is sent for the duration of the failure, and for at least 1 second (see t1.231.02-2003 section 4.5.1). In T1 D4 operation, RAI for T1 should be sent by setting the S bit of frame 12 of the multi-frame to 1
TSP RX: RAI defect	IWF TX: ▪ Sends packets with the M bits set to b10 (bit 6, bit 7) and the L bit set to 0
TSP RX: LOMF defect (E1 only)	TSP TX: ▪ The distant multi-frame alarm is transmitted to the far end by setting the bit in position 2 of time slot 16 in frame 0 to 1. This is often referred to as the Y bit (E1 in CAS framing only)

Event	Actions
IWF RX: Packet Received with L Flag set	TSP TX: ▪ If packet arrived with no payload or if LbitPayloadPolicy is set to ignore payload (default), uses FrameLbitPolicy to determine the payload and signaling performed on the payload and entire trunk ▪ Default is to play out the idle pattern instead of the payload ▪ Optionally, an “all ones” pattern is played out on the entire T1/E1 trunk ▪ Optionally, the idle pattern is played out and idle signaling is performed for the relevant time slots
IWF RX: Packet Received with R Flag set	TSP TX: ▪ Plays out data data amd signaling on TDM circuit according to the FramedRflagPolicy ▪ Default is to do nothing different and only report this to management. If the RflagPolicy is set to RAI, sends out RAI on the associated T1/E1 interface (independent of TDM equipment configuration, and even if other pseudowires associated with this TDM interface have a different configuration) ▪ If the FramedRflagPolicy is set to “channel idle”, plays out the IdlePattern byte and signal “channel idle” for the specific DS0s on trunk
IWF RX: Packet Received with M Flags set to 10 and L bit is 0	TSP TX: ▪ Plays out data on TDM circuit according to the FramedRDPolicy. Default is to do nothing different and to report this to management ▪ If RDPolicy is set to RAI, sends out RAI on the associated T1/E1 interface (independent of TDM equipment configuration, and even if other pseudowires associated with this TDM interface have a different configuration) ▪ If the FramedRDflagPolicy is set to “channel idle”, plays out the IdlePattern byte and signal “channel idle” for the specific DS0s on trunk
IWF RX: Missing packet detected	TSP TX: ▪ Plays out an appropriate amount of data on TDM circuit according to the PktReplacePolicy. Default is to generate Idle for relevant time slots. If pktReplacePolicy is set to AIS, plays out the idlepattern on these slots

Event	Actions
IWF RX: PW enters LOPS state	TSP TX: ▪ Uses FrameLOPSPolicy to determine the payload and signaling performed on the payload and on the entire trunk ▪ Default is to play out the idle pattern instead of the payload ▪ Optionally, an “all ones” pattern is played out on the entire T1/E1 trunk ▪ Optionally, the idle pattern is played out and idle signaling is performed for the relevant time slots IWF TX: ▪ Generates packets with the R bit set
IWF RX: PW exits LOPS state	TSP TX: ▪ Plays out data from jitter buffer IWF TX: ▪ Generates packets with the R bit cleared

The following figures present examples of transferring events across the network. Figure 33 shows the transfer of the RAI failure across the network, while Figure 34 demonstrates a case of loss of packets.

Figure 33: RAI Transfer

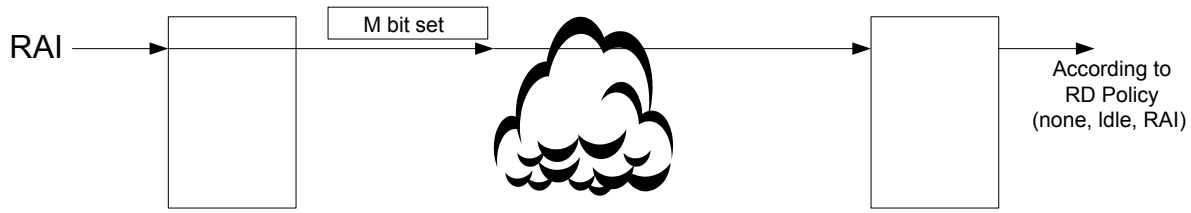

Figure 34: Loss of Packets

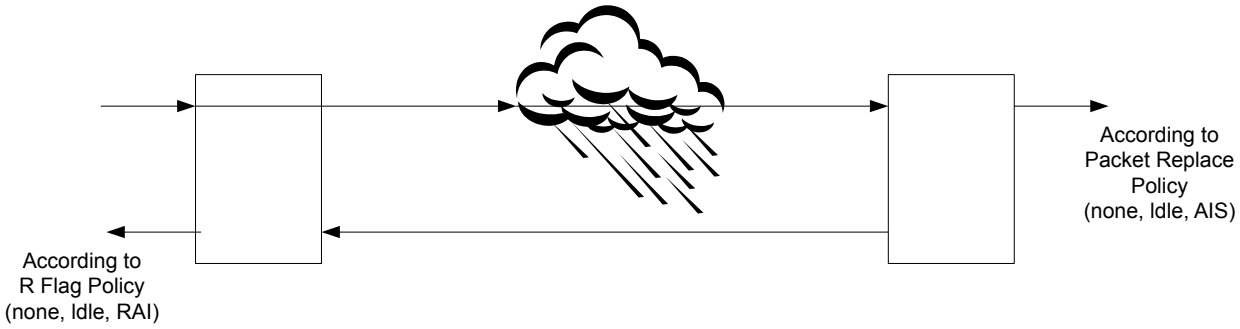

At the IWF TX, it is possible to have the R flag set to 01, together with either the L flag or the M flag. If for some reason, the TSP RX detects L flag setting defects simultaneously with M flag setting defects, priority is given to the L flag defects, the L flag is set to 1, and M is sent as 00.

At the TSP TX, several conflicting framed policy instructions may occur. For example, a packet received with the L bit set while in LOPS state, packets can be received with the L and R bits set, etc. Operation hierarchy is determined in the following order:

1. FramedLOPSpolicy
2. FramedLbitPolicy
3. FramedRbitPolicy
4. FramedRDbitPolicy

This hierarchy is set to make sure that operations on the TSP TX will be consistent and will not fluctuate. In particular, while in the LOPS state, occasional receipt of a packet with the L bit or the R bit set should not change the indication on the wire.

Conflicts between AIS and RAI IWF indications and RAI detected by the framer due to an incoming defect on the T1/E1 are determined according to the standard TDM (framer) behavior, as per the following priority:

1. AIS
2. RAI
3. Idle pattern

This hierarchy is also applicable when two or more sessions introduce conflicting policies on the outgoing T1/E1 circuit. In particular, configuration of AIS on the entire T1/E1 should not be set as a policy when more than one CESoPSN pseudowire is aggregated to the same trunk.

Application Signaling

When Out of Stream CAS signaling is used with structure-aware emulation, care must be taken in handling application signaling during error conditions as shown below:

- Application signaling must be frozen to the peer IWF once the local TDM interface indicates any of the following defects:
- LOS
- OOF
- AIS

The idle signaling pattern should be sent to the peer IWF when any of the following failures persist:

- LOS
- LOF
- AIS
- LOMF

The idle signaling pattern should also be sent locally to the TSP TX when the IWF RX detects that packets for a particular pseudowire are received with the L, R or M bits set and the corresponding policy is set to “channel idle”.

The idle signaling pattern should also be sent locally to the TSP TX when the IWF RX has entered the LOPS state for a particular pseudowire and the LOPS policy is set to “channel idle”.

The idle signaling pattern is defined in the parameter SigIdle.

As soon as new packets are received and the defect(s) that caused the idle pattern to be sent is (are) cleared:

- Signaling sent on the TSP TX should be updated
- Signaling packets should be sent three times to update the peer's TSP TX

Errored Second Counters

For each TDM interface and for each pseudowire, the TSP must detect and count:

- Errored seconds
- Severely errored seconds
- Unavailable seconds

The IWF must detect an error defect whenever filler data is played out of the jitter buffer. For structure-agnostic operation, a filler packet is considered a single error defect.

The IWF must count:

- An errored second as any second in which one or more error defects are detected
- A severely errored second as a second in which the number of error defects is equal to or greater than the configurable severely errored second threshold
- An unavailable second when ten consecutive seconds qualify as severely errored seconds. This condition will last until ten consecutive seconds occur that do not qualify as severely errored seconds

CES Configuration Parameters

See TDM Error Reporting Command on page 158.

References

Supported standards include:

- ANSI: T1.231, T1.403
- ITU: G.706, G.732 (E1) G.733 (T1), G.775

Unsupported standards:

- ETSI 300 233 - this standard defines how ISDN primary rate works

2 Management Options

MG-IP units feature multiple management options that support unit use in a range of applications.

In a standalone application, the TDM over packet functionality of the MG-IP is the primary application. The processor on the MG-IP is the only processor, so there is no other processor to manage the MG-IP. Management will need to be performed from an external processor such as a PC or a craft terminal. See Figure 35.

Figure 35: Standalone Application

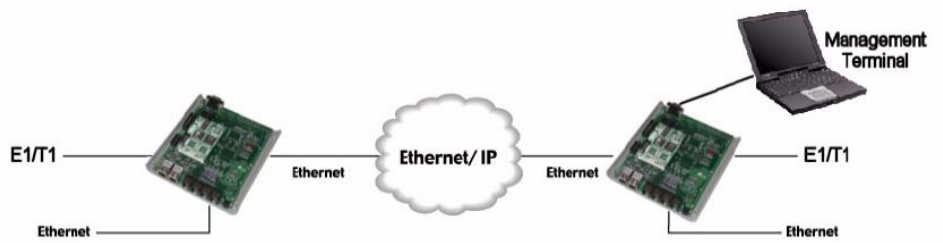

The Command Line Interface (CLI)

The **Command Line Interface** (CLI) provides access to all of the user modifiable parameters of the module. There are commands for displaying configuration and status information as well as performance statistics. The CLI can be run from a serial terminal or a PC via a serial interface or via a network connection by using Telnet application.

See Appendix A for CLI command descriptions.

CLI Script Files

Users may create textual configuration files comprising text lists representing CLI commands.

CLI script files may prove useful for customers using the product in standalone mode under the following scenarios:

- Statically - as input to the CLI command ("**dlf**" – download file)
- Dynamically - as input to a DHCP option for customers using a DHCP client to configure their IP addresses

Script File Format

The script file contains CLI commands, with each command listed on an individual line separated by \r\n (cr/lf) characters. Blank lines and spaces are allowed.

- The "**;**" character represents the start of a comment, which is terminated by an EOL (end-of-line) character
- The file must start with a username and password, as follows:
- admin
- admin (the "admin" string must not be followed by spaces, or it will be treated as an invalid login/password)

- **\a\dlf <IP> cfg <file path>** - (download CLI script). This CLI is forbidden in the script. It is treated as an error command (failure is returned).
- **\a\dlf <IP> img <file path>** (download software image).This CLI command with an "img" parameter is relevant only in “safe” download mode (also referred to as UDL mode), the only mode in which a software image can be downloaded. In non-UDL mode, this parameter is treated as invalid.

In “safe” download (UDL) mode, when the command appears in a CLI script, a download request is sent to the TFTP server and the remaining commands in the script are ignored.

However, if a software image with this filename has already been downloaded, no download request is sent and the script continues to run.

Image files are customer specific and are included in a dedicated ZIP file provided by Olencom. This ZIP file’s name must not be changed.

- Progress messages following success/failure: unsolicited messages are sent to all CLI users (connected through UART/Telnet)
- If a command succeeds:

Command completed. Line: <line number>, Command: <command name>

- If the command fails:

  CLI script file processing failed.. Line: <line number>, Command: <command name>

  Description:

  <Description returned from CLI>

  The script stops and the system restarts.

  An identical failure message is sent to the Syslog server.

Guidelines to Writing CLI Script File

CLI scripts used in DHCP mode have a very specific format and comply with specific guidelines, as follows:

- Boot with the default configuration, which has NO associated sessions

The CLI script should be composed in the following format:

- User name and password
- dlf command for image file (if required)
- Disable TDM ports
- Configure TDM ports and, if required, TDM hardware profiles
- Enable TDM ports
- Add all sessions
- Configure all sessions
- Enable all sessions

The order of the commands bears significance. Olencom recommends it not be changed.

If you use the \c\rr and \c\rp commands in the CLI script file, the configuration contained in the script file will be saved to the database statically.

A Sample Script File

admin

admin

\a\dlf 169.254.1.1 img MG-IP-1-R03.04.00_D001.zip

\c\top\spod all

\c\top\cet struct p1

\c\t1\p1\sfp d4

\c\top\spoe all

\c\top\adds s01 s01

\c\top\ccpl s01 8 5

\c\top\scfg\ccip s01 169.254.1.119

\c\top\sse all

TLV Files

This section describes TLV11 rules of construction. TLV11 is an object used to set arbitrary SNMP objects it contains within an SNMP Varbind.

TLV is a binary file format. A TLV file consists of type, length and value elements. They appear as a stream of octets (with no delimiters between them).

- Length is a single octet containing the length of the value field in octets (not including type and length fields)
- The type is a single octet
- Value ranges from one to 255 octets. The value is treated according to its type

The value may contain additional TLV elements. Several containment levels are supported. An element whose value contains additional elements is referred to as a “container” in this section and the elements contained in its value are referred to as “nested elements”. An element whose value does not contain additional TLV elements is referred to as a “single element”.

The nested element type depends on the container TLV type. For example, a nested TLV of type 1 contained within a TLV of type 2 is treated differently than a TLV of type 1 contained within a TLV of type 3. In the first case, the type of the nested TLV is treated as 2.1 and in the second case, it is treated as 3.1.

The TLV file ends with type 0xFF, without length and value elements.

TLV Structure

TLV11 is a container of the following structure (its specification is listed in Table 13).

- TLV11
- TLV48 (Varbind TLV)
  - TLV6 (OID TLV)

- Value TLV

Table 13: TLV Structure Specification

Type	Container	Length (bytes)	Value
11	Yes	Variable	SNMP MIB object
11.48	Yes	Variable	Varbind
11.48.2	No	4	Integer value (signed)
11.48.4	No	Variable	Octets
11.48.6	No	Variable	OID (e.g. 1.3.6)
11.48.64	No	4	IP address
11.48.65	No	4	Counter (unsigned integer)
11.48.70	No	8	64 Counter (unsigned integer)

Rules of Construction

Maximum Length Constraint

The maximum length of the VarBind TLV value is limited to 249.

249 = 255-6. 255 is the maximal length of the TLV11 value and 6 is the sum of the VarBind TLV type and length fields (2 bytes), OID type and length fields (2 bytes) and value TLV type and length (2 bytes).

SNMP allows values longer than 255 bytes (for example, strings). However, they cannot be represented in TLV format due to length limitation.

TLV6 (OID)

TLV6 may be used in the two following cases:

- The OID representing the relevant MIB variable + index (the 1st part of the Varbind pair)
- A value (the 2nd part of the Varbind pair)

Encoding Rules

TLV6 (OID) encoding rules are not defined in standards. However, there a de-facto standard is in common use, as follows:

- Every OID starts with 1.3. In order to conserve space, this prefix is presented in a single byte instead of two. The prefix is presented as X*40+Y, where X=1, Y=3 and the result is 43 (=0x2B). Similarly, the TLV of OID=1.3.6.1 will look like the following:

6	3	43	6	1
Type	Length	Value		

- When a sub-identifier of OID is greater than or equal to 128 (for example 1.3.6…. **24222** – the Olencom assigned number), it is divided into numerous octets as follows:
- Only seven bits in each octet are used to represent the value
- The most significant bit (MSB) of the last octet is 0
- The most significant bit of other octets is 1
- Example1: sub-identifier 128 = 0x80 = 10000000
  - Last (least significant) 7 bits form the last octet with MSB = 0: 00000000
  - The first octet is 10000001 – MSB = 1 and LSB is the remaining bit from the original sub-identifier
  - Result: 10000001 00000000 = 0x8100. This sub-identifier takes up 2 bytes in the TLV file
- Example2: sub-identifier 24222 = 0x5E9E = 101 1110 1001 1110
  - Last 7 bits from the last octet. The MSB of the octet is 0: 00011110
  - Next 7 bits from the next octet with 1 in MSB: 10111101
  - The remaining bit forms the first octet. The MSB of the octet is 1, the rest of the bits are zeros: 10000001.
  - Result: 10000001 10111101 00011110 = 0x81BD1E. This sub-identifier takes up 3 bytes in the TLV file
- Example3: for additional clarification, sub-identifier 127 = 01111111
  - This sub-identifier is not encoded, as its MSB is 0
  - Result: 01111111 = 0x7F. This sub-identifier takes up 1 byte in the TLV file
- When an octet with 1 as its MSB is encountered while parsing OID in a TLV file, it means that this is a first octet of an encoded sub-identifier. This encoded sub-identifier ends with an octet that has 0 in its MSB.

TLV Examples

The following TLV contains the Varbind of dsx1LineCoding (OID = 1.3.6.1.2.1.10.18.6.1.6), index 1 and value AMI = 5 (integer type).

11	**21**	**48**	**19**	**6**	**11**	43	6	1	2	1	10	18	6	1	6	1	**2**	**4**	0	0	0	5
type	length	type	length	type	length												type	length				
TLV 11		Varbind		OID													Integer TLV					

The following TLV contains the Varbind of OlencomPwAdminStatus (OID = 1.3.6.1.4.1.24222.3.3.1.2.1.37), index 1 and value UP = 1 (integer type). The sub-identifier 24222 is encoded to 3 bytes (129, 189, 30 = 0x81BD1E).

11	**25**	**48**	**23**	**6**	**15**	43	6	1	4	1	129	189	30	3	3	1	2	1	37	1	**2**	**4**	0	0	0	1
T	L	T	L	T	L																**T**	**L**				
TLV11		Varbind		OID																	Integer					

SNMP

Please refer to SNMP Support on page 131.

Automatic Management and Provisioning

Safe Download (UDL) Mode

The MG-IP supports a “safe” remote image download mode (this mode is also referred to as UDL mode), in which a new image is copied to the MG-IP (for example, when a remote software upgrade is required). The MG-IP will switch to the new copied image *only* if the download process was completed successfully. Note that the MG-IP can be produced either with or without this mode. Availability of this mode is set during MG-IP production and may not be configured online.

File Download via TFTP Client

This mechanism allows firmware/configuration data to be downloaded to the target using a new CLI. This mechanism is applicable mainly to customers using the module in standalone mode, or when using the module on an evaluation platform.

A CLI command has been developed for file downloads. This command can be used to download:

- Configuration/CLI script files
- Image files. This is only applicable when the “safe dowload” (UDL) option is used (note that all standalone-purpose modules are produced and released with the UDL option)

The CLI command is **\admin\dlf**

- Mandatory parameters:
- TFTP server IP address
- Downloaded file type – image/configuration file
- File path – a string no longer than 70 characters. The file path includes the file name, which must have a TXT extension for CLI script files.
- Optional parameter:
- Force – indicates whether the given filename should be compared to the saved filename of the image, and can determine whether a download is performed in any case or only if they differ (this only applicable to software image file)

Dynamic Downloading/Processing of CLI Script-based Configuration

In DHCP mode, the system has the option to acquire a TFTP server IP address and configuration file path using DHCP options. After setting the WAN IP address, if the TFTP option exists in the DHCP response, a TFTP process is initiated to download the configuration file.

If the download fails, the system will restart itself.

In case of successful file download, the CLI script configuration file received is processed and used to configure the system.

A success/fail message is sent to the Syslog server (if it exists in the DHCP option) following the configuration file process.

Dynamic Firmware Download through a TFTP/DHCP Client

This process is identical to dynamically downloading CLI-script based configuration files. If the CLI script configuration file includes the "**dlf <IP> img <file path>**" command, a download request is sent to the TFTP server and the remaining commands in the script are ignored.

However, if a software image with this filename already exists on the target, no download request is sent and the script continues to run.

Note that image upgrade using a TFTP client is supported in “safe download” (UDL) mode only. System behavior following the image download is based on UDL implementation.

Image files are customer specific and are included in a dedicated ZIP file provided by Olencom. This ZIP file’s name must not be changed.

Syslog Error Reporting

The device supports Syslog error reporting (see Table 14). This is currently limited to the startup session, when dynamic provisioning is used. See Syslog CLI commands in Appendix A for further information on Syslog configuration.

Table 14: Syslog Messages

Scenario	Facility	Severity	Mnemonic	Text
Init related messages				
Success messages				
Init successful	Init	Info	InitSuccess	Init completed successfully
Failure messages				
Init failed - unsupported file type	Init	Critical	FailedFile	Failed: Unsupported file type
Init failed - Problem with CLI script processing	Init	Critical	CLIscriptFail	Failed: CLI script file processing failed. Line: <line #> Command: <string>, Description: <string>
Init failed - Missing TFTP IP option in DHCP offer	Init	Critical	DHCPMissTFTPOpt	Failed: Missing TFTP server IP in DHCP offer
TFTP server returned an undefined error	Init	Critical	TFTPUndeErr	Failed: TFTP server returned undefined error
TFTP server file not found	Init	Critical	TFTPFileNotFound	Failed: TFTP server returned error - file not found
Failed to access TFTP server	Init	Critical	TFTPAccessViol	Failed: TFTP server returned error - access violation
Illegal operation on TFTP server	Init	Critical	TFTPIllegalOper	Failed: TFTP server returned error - illegal operation
Unknown TFTP transport ID	Init	Critical	TFTPUnknownID	Failed: TFTP server returned error - unknown transfer ID
Invalid TFTP user	Init	Critical	TFTPInvalidUser	Failed: TFTP server returned error - no such user
Illegal TFTP option	Init	Critical	TFTPIllegalOpt	Failed: TFTP server returned error - illegal option
General TFTP failures without specific message	Init	Critical	TFTPFailure	Failed: TFTP error <error # in hex format>
Received IP is on subnet of other interface(s)	Init	Critical	IPOnSameSubnet	Failed: Received IP address is on subnet of other interface(s).
TFTP connection timeout expired during connection	Init	Critical	TFTPConTimeoutExp	Failed: TFTP server couldn't be reached, connection timeout expired
Size of file to be downloaded is too big	Init	Critical	DnldFileTooBig	Failed: Size of file to be downloaded is too big

Scenario	Facility	Severity	Mnemonic	Text
Configuration download related messages				
Failure messages				
Unsupported file type	CfgDnld	Warning	FailedFile	Failed: Unsupported file type
Problem with CLI script processing	CfgDnld	Warning	CLIscriptFail	Failed: CLI script file processing failed. Line: <line #> Command: <string>, Description: <string>
Missing TFTP IP option in DHCP offer	CfgDnld	Warning	DHCPMissTFTPOpt	Failed: Missing TFTP server IP in DHCP offer
TFTP server returned an undefined error	CfgDnld	Warning	TFTPUndeErr	Failed: TFTP server returned undefined error
TFTP server file not found	CfgDnld	Warning	TFTPFileNotFound	Failed: TFTP server returned error - file not found
Failed to access TFTP server	CfgDnld	Warning	TFTPAccessViol	Failed: TFTP server returned error - access violation
Illegal operation on TFTP server	CfgDnld	Warning	TFTPIllegalOper	Failed: TFTP server returned error - illegal operation
Unknown TFTP transport ID	CfgDnld	Warning	TFTPUnknownID	Failed: TFTP server returned error - unknown transfer ID
Invalid TFTP user	CfgDnld	Warning	TFTPInvalidUser	Failed: TFTP server returned error - no such user
Illegal TFTP option	CfgDnld	Warning	TFTPIllegalOpt	Failed: TFTP server returned error - illegal option
General TFTP failures without specific message	CfgDnld	Warning	TFTPFailure	Failed: TFTP error <error # in hex format>
Received IP is on subnet of other interface(s)	CfgDnld	Warning	IPOnSameSubnet	Failed: Received IP address is on subnet of other interface(s).
TFTP connection timeout expired during connection	CfgDnld	Warning	TFTPConTimeoutExp	Failed: TFTP server couldn't be reached, connection timeout expired
Size of file to be downloaded is too big	CfgDnld	Warning	DnldFileTooBig	Failed: Size of file to be downloaded is too big

Scenario	Facility	Severity	Mnemonic	Text
Image download related messages				
Failure messages				
Unsupported file type	ImgDnld	Warning	FailedFile	Failed: Unsupported file type
Problem with CLI script processing	ImgDnld	Warning	CLIscriptFail	Failed: CLI script file processing failed. Line: <line #> Command: <string>, Description: <string>
Missing TFTP IP option in DHCP offer	ImgDnld	Warning	DHCPMissTFTPOpt	Failed: Missing TFTP server IP in DHCP offer
TFTP server returned an undefined error	ImgDnld	Warning	TFTPUndeErr	Failed: TFTP server returned undefined error
TFTP server file not found	ImgDnld	Warning	TFTPFileNotFound	Failed: TFTP server returned error - file not found
Failed to access TFTP server	ImgDnld	Warning	TFTPAccessViol	Failed: TFTP server returned error - access violation
Illegal operation on TFTP server	ImgDnld	Warning	TFTPIllegalOper	Failed: TFTP server returned error - illegal operation
Unknown TFTP transport ID	ImgDnld	Warning	TFTPUnknownID	Failed: TFTP server returned error - unknown transfer ID
Invalid TFTP user	ImgDnld	Warning	TFTPInvalidUser	Failed: TFTP server returned error - no such user
Illegal TFTP option	ImgDnld	Warning	TFTPIllegalOpt	Failed: TFTP server returned error - illegal option
General TFTP failures without specific message	ImgDnld	Warning	TFTPFailure	Failed: TFTP error <error # in hex format>
Received IP is on subnet of other interface(s)	ImgDnld	Warning	IPOnSameSubnet	Failed: Received IP address is on subnet of other interface(s).
TFTP connection timeout expired during connection	ImgDnld	Warning	TFTPConTimeoutExp	Failed: TFTP server couldn't be reached, connection timeout expired
Size of file to be downloaded is too big	ImgDnld	Warning	DnldFileTooBig	Failed: Size of file to be downloaded is too big
DHCP messages				
DHCP IP lease expired on interface <IP address> = the expired address <Interface name> = WAN/LAN	Dhcp	Critical	DhcpIpExpired	DHCP IP <IP address> lease has expired on interface <interface name>
TLV messages				
Problem with TLV script processing parsing problem or wrong OID.	CfgDnld	Warning	TLVFail	Failed: TLV file processing failed. {Problems in parsing.} | {OID: <OID>.}

3 Configuring The MG-IP via CLI

This chapter describes the tasks that need be performed to configure MG-IP units.

Each section builds upon the previous section: the console must be configured before operating the CLI interface; the WAN and the T1/E1 circuit must be configured before managing the module; the module management must be understood before using SNMP to gather MIB information and other status. Each section gives an overview of how to configure the module using the CLI interface and demonstrates simple configurations. The section **Ошибка! Источник ссылки не найден.** on page **Ошибка! Закладка не определена.** contains an explanation about how traffic moves from the T1/E1 circuit through the system to the WAN, the special configuration of the T1/E1 circuit to reflect structured or unstructured mode, and how the information stream is packetized using headers and then moved out of the system to the Packet Switched Network (PSN). The section Session Management Tasks in Structured Mode on page 118 discusses the concept of a session and Out-of-Stream Signaling (OOS).

For maximum use of this chapter, first set up the hardware and all required network connections, and turn the power on.

For an introduction to the CLI, refer to the chapter Command Line Interface on page 149. The configuration tasks are described in the following sections:

- Configuring the Management PC on page 66
- Managing Users on page 68
- Managing the CONSOLE Interface on page 74
- Managing Basic Functionality on page 75
- Global Configuration Status on page 81

It is possible to set all Ethernet and MAC layer configuration options dynamically using the ac (ApplyChanges) CLI command, without the need to perform Replace & Reload (\c\rr). However, one must make sure that no pesudowire sessions are active when using this command.

- Managing the T1/E1 Interface on page 91.
- **Ошибка! Источник ссылки не найден.** on page **Ошибка! Закладка не определена.**.
- Managing SNMP on page 125.

The MG-IP-1 and MG-IP-4 feature identical software and board layouts. All CLIs and management options are exactly the same on both units. While this section focuses on the MG-IP-1, it is equally applicable to the MG-IP-4.

Configuring the Management PC

Connect an RS-232 null modem cable to the unit and to a COM port of the management PC. Open HyperTerminal (found on Programs/Accessories/ Communications menu on Windows 2000 or Windows XP). The opening screen allows the user to define a connection. Select an icon and enter a name for the connection.

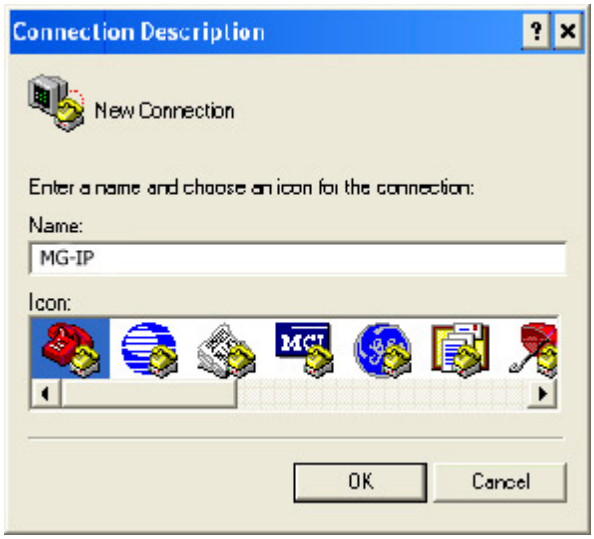

On the “Connect to” panel in the “Connect using” drop-down selection, pick the COM port you are using.

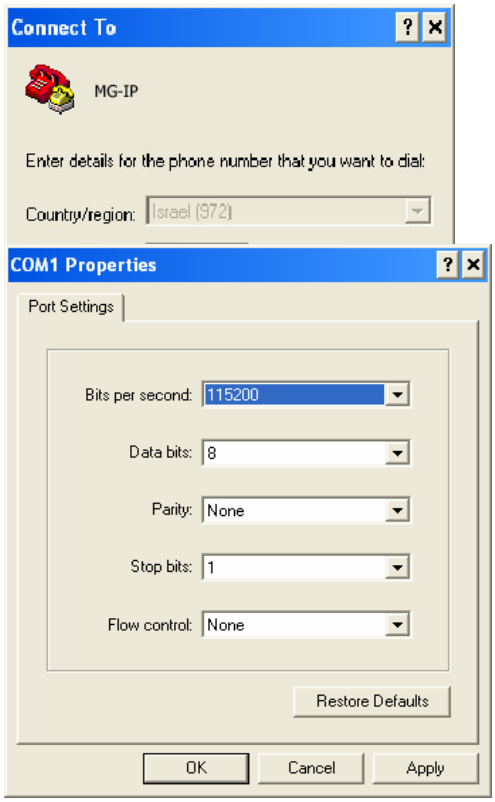

On the COM properties pane, set the following:

- 115200 bps
- 8 bits
- no parity
- 1 stop bit
- no flow control

The Hyper terminal now opens. Press “Enter” to get the CLI login prompt.

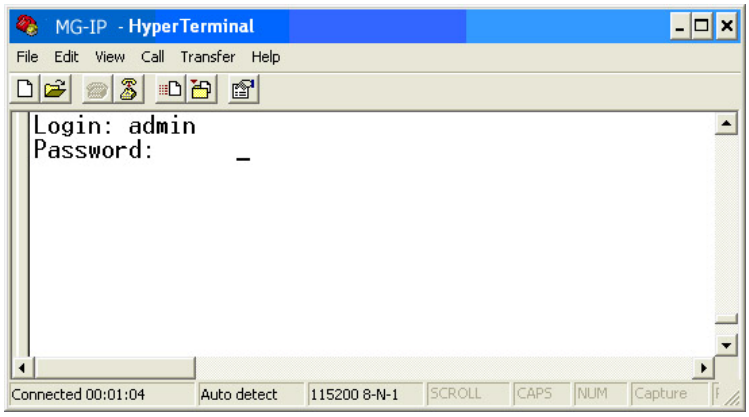

At the login prompt type “admin”. At the password prompt type “admin”, and you will get the loging prompt.

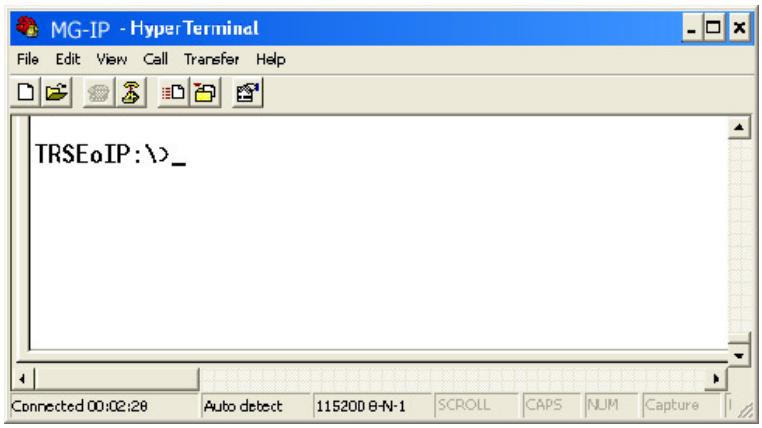

TELNET Using LAN

To establish a Telnet connection with the MG-IP, connect to one of the Ethernet ports with a PC. The factory default IP address of a master unit is 169.254.1.100 (the slave is 169.254.1.101) . The default subnet mask is 255.255.255.0. If you need to change the IP address in the module before connecting to them via a LAN, see Managing LAN and WAN Interfaces on page 83.

Select Windows Start button, then “Run...” then type “telnet nn.nn.nn.nn”, where the n's are the module lan IP address.

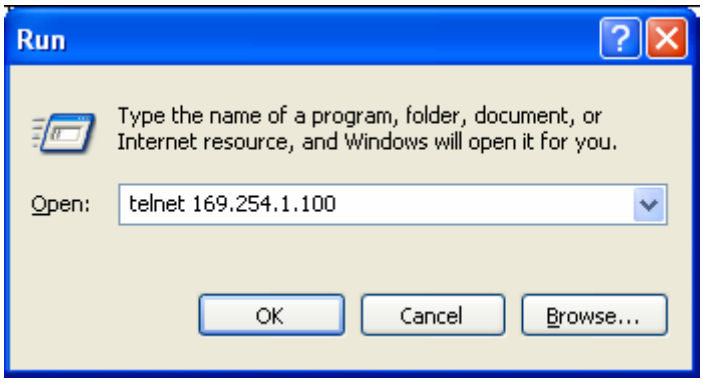

The MG-IP’s product prompt will be displayed. Note that if a reset command such as \c\rr is used, the Telnet session will need to be reestablished to reconnect to the CLI.

Managing Users

MG-IP units allow for creation of additional users beyond the default admin user. Additional users may have full administrator privileges like admin or may be assigned to a user group with limited administrative privileges. The different user groups to which to assign users are as follows:

Table 15: User Groups

User Group	Description
Viewer	Users assigned to the Viewer user group may only run monitoring commands in the \Config and \Monitor directories, as well as the cp (change password) command in the \Admin\Users directory.
Oper	Users assigned to the Oper user group may run all commands in the \Monitor and \Config directories, as well as the cp (change password) command in the \Admin\Users directory.

Admin	Users assigned to the Admin user group may run all commands in any directory.

Users can be configured to have access only from the CONSOLE, or also from the LAN interface using Telnet.

User Management Tasks

The user management commands are executed from the \Admin\Users directory, unless noted otherwise. The following user management tasks are available:

Table 16: User Management

Action	Command
Add a user	au (see page A-8 in Appendix A)
Delete a user	du (see page A-17 in Appendix A)
Display active users	gau (see page A-21 in Appendix A)
Display all users	gu (see page A-64 in Appendix A)
Set a user's password	cp (see page A-12 in Appendix A)
Set an inactivity timeout for the user	sut (see page A-129 in Appendix A)
End a user's login session.	ful (see page A-19 in Appendix A)
Log out at any time from any directory	Lo

Manage User Accounts Example

Change directory to the Admin directory from the root:

MG-IP-1:\>a\u

MG-IP-1:\Admin\Users>

Display all users in the system:

MG-IP-1:\Admin\Users>gu

Username	Group	Timeout	CommApp
Current Users:			
view	Viewer	-1	All
logger	Viewer	-1	All
oper	Oper	60	All
admin	Admin	60	All
bdadmin	Admin	30	UART
Modified Users			
view	Viewer	-1	All
logger	Viewer	-1	All
oper	Oper	60	All
admin	Admin	30	All
bdadmin	Admin	60	UART

Find out how which users are currently active:

MG-IP-1:\Admin\Users>gau

Username	Comm Id	Group	Timeout	Timeleft
Active Users:				
admin *	11	Admin	30	30

Add several users to the system:

MG-IP-1:\Admin\Users>**au user1 viewer 10 all**

The command completed successfully.

Use \c\rp to save the modified running_config

MG-IP-1:\Admin\Users>au user2 oper -1 all

The command completed successfully.

Use \c\rp to save the modified running_config

MG-IP-1:\Admin\Users>au user3 admin 100 uart

The command completed successfully.

Use \c\rp to save the modified running_config

MG-IP-1:\Admin\Users>au user4 viewer 5 all

The command completed successfully.

Use \c\rp to save the modified running_config

MG-IP-1:\Admin\Users>**gu**

Current Users:

view	Viewer	-1	All
logger	Viewer	-1	All
oper	Oper	60	All
admin	Admin	30	All
bdadmin	Admin	60	UART
user1	Viewer	10	All
user2	Oper	-1	All
user3	Admin	100	UART
user4	Viewer	5	All

Modified Users

view	Viewer	-1	All
logger	Viewer	-1	All
oper	Oper	60	All
admin	Admin	30	All
bdadmin	Admin	60	UART
user1	Viewer	10	All
user2	Oper	-1	All
user3	Admin	100	UART
user4	Viewer	5	All

Set each user's password

MG-IP-1:\Admin\Users>**cp user1**

Administrator password:**admin**

New Password:**xxxx**

Confirm New Password:**xxxx**(the typed password is not echoed)

Only a user with Admin privileges may change all passwords. One may typically only change one's own password.

Set the inactivity timeout for each new user

A value was set on creation of the user. This task is only repeated if the timeout is no longer relevant.

Set user1 to a 10 minute timeout.

MG-IP-1:\Admin\Users>**sut user1 10**

The command completed successfully.

Use \c\rp to save the modified running_config

Set user2 to an unlimited timeout.

MG-IP-1:\Admin\Users>**sut user2 -**1

The command completed successfully.

Use \c\rp to save the modified running_config

Set user3 to a two minute timeout.

MG-IP-1:\Admin\Users>**sut user3 2**

The command completed successfully.

Use \c\rp to save the modified running_config

Set user4 to a five minute timeout.

MG-IP-1:\Admin\Users>**sut user4 5**

The command completed successfully.

Use \c\rp to save the modified running_config

View the changes by issuing a gu command.

MG-IP-1:\Admin\Users>**gu**

Current Users:

Current Users:

view	Viewer	-1	All
logger	Viewer	-1	All
oper	Oper	60	All
admin	Admin	30	All
bdadmin	Admin	60	UART
user1	Viewer	10	All
user2	Oper	-1	All
user3	Admin	2	UART
user4	Viewer	5	All

Modified Users

view	Viewer	-1	All
logger	Viewer	-1	All

oper	Oper	60	All
admin	Admin	30	All
bdadmin	Admin	60	UART
user1	Viewer	10	All
user2	Oper	-1	All
user3	Admin	2	UART
user4	Viewer	5	All

Log out using the lo command. Then log back in as user1.

```
MG-IP-1:\Admin\Users>lo

MG-IP-1 R03.01.01_D001-202

Login: user1
Password:
MG-IP-1 R03.01.01_D001-202
MG-IP-1:\>
```

User1 has view only privileges. Traverse the directories and notice that the only available commands are those to display information. This user is not privileged to set any parameters. Log out and log back in as user2. This time the directories will display more functionality available to the operator, but certain functions, such as setting user characteristics, will be restricted.

Display active user

Change directory to the Admin\Users directory. Type in gau to display the list of active users.

```
MG-IP-1:\Admin\Users>gau

Username    Comm Id    Group    Timeout    Timeleft
Active users
 user2 *      12        Oper      -1         -1
```

Log out from user2 and log back in as admin.

```
MG-IP-1:\Admin\Users>lo

Login: admin
Password:
MG-IP-1 R03.01.01_D001-202
MG-IP-1:\>
```

Delete a user from the system

Change directory to \Admin\Users. Delete user4 from the system.

MG-IP-1:\Admin\Users>**du user4**

The command completed successfully.

Use \c\rp to save the modified running_config

Verify that user4 is removed from the system with the gu command.

MG-IP-1:\Admin\Users>**gu**

Current Users:

view	Viewer	-1	All
logger	Viewer	-1	All
oper	Oper	60	All
admin	Admin	30	All
bdadmin	Admin	60	UART
user1	Viewer	10	All
user2	Oper	-1	All
user3	Admin	100	UART

Modified Users

view	Viewer	-1	All
logger	Viewer	-1	All
oper	Oper	60	All
admin	Admin	30	All
bdadmin	Admin	60	UART
user1	Viewer	10	All
user2	Oper	-1	All
user3	Admin	100	UART

Managing the CONSOLE Interface

MG-IP units can be exclusively managed using the CONSOLE interface, or configured for access through the LAN interface via Telnet.

CONSOLE Management Tasks

Perform the following tasks to configure the CONSOLE. The CONSOLE management commands are run from the \Config\CONSOLE directory, unless noted otherwise.

Table 17: CONSOLE Management

Action	Command
Configure the CONSOLE interface baud rate	scu (see page A-95 in Appendix A)
Display CONSOLE interface information	gc (see page A-26 in Appendix A) \Config\gcu (see page A-33 in Appendix A)

CONSOLE Management Example

Change directory to config**console**:

MG-IP-1:\>config**cons**

MG-IP-1:\Config**CONSOLE**>

Get the current console configuration:

MG-IP-1:\Config\CONSOLE>**gc**

	Running_config	Modified Running_config
Baud rate ..... :	115200	115200
Stop bit..... :	1	1
Protocol..... :	Term	Term
Mode ..... :	Enabled	Enabled

Reconfigure the baud rate:

MG-IP-1:\Config\CONSOLE>**scu 57600**

The request was updated successfully in modified running_config.

The configuration change will be activated after the next Replace&Reload (\c\rr)

If you change the baud rate for the module, make sure it reflects the configuration of the management PC COM port before saving the changes.

Change the baud rate back to the desired baud rate if you don't want to make any changes at this time.

To permanently change the configuration, issue the replace and reload command. The MG-IP restarts.

MG-IP-1:\Config\CONSOLE>**c\rr**

MG-IP-1 R03.01.01_D001-202

Login:

Managing Basic Functionality

This section describes the tasks associated with viewing or configuring basic MG-IP functionality. The tasks include displaying basic status and statistics about the board, changing the CLI prompt, and saving configuration changes and restarting the board.

Basic Board Management Tasks

Table 18: Basic Board Management

Action	Directory	Command
Run an internal self-test	\Diagnostics	fts (see page A-20 in Appendix A)
Display status about the board, including links, type, version, memory, and checksum information	\Config, \Monitor, \Diagnostics \Admin	gsb (see page A-58 in Appendix A) gbd (see page A-23 in Appendix A)
Display information about the configuration database	\Admin	gcds (see page A-31 in Appendix A)
Display the firmware version and status	\Admin \Config	gfs (see page A-36 in Appendix A) gv (see page A-65 in Appendix A)
Set or display the current and modified CLI prompt	\Config \General	scp (see page A-81 in Appendix A) gcp (see page A-24 in Appendix A)
Set or display the date and time as set on the MG-IP	\Admin	sdt (see page A-96 in Appendix A) gdt (see page A-34 in Appendix A)
Replace the startup configuration with modified configuration. The rr command also restarts the MG-IP	\Config	rp (see page A-75 in Appendix A) rr (see page A-76 in Appendix A)
Reload the startup configuration, discarding any changes. The rp command also restarts the MG-IP	\Config	rl (see page A-69 in Appendix A)
Reset the database to a default configuration	\Admin	sddb (see page A-97 in Appendix A)
Autmatic download configuration file (CLI script file or TLV file). Autmatic download Image file (safe dowanload (UDL) mode only)	\Admin	dlf (see page A-18 in Appendix A)

Initialize the System

In order to re-initialize the system back to the default configuration, run the sddb command to reset the database.

sddb requires the line format, whether E1 or T1 (J1 is for future use), and the clock source. The optional model template defaults to the predefined Olencom model or to the customer specification model. After issuing the sddb command the system restarts. Change directory to \Admin.

MG-IP-1:\Admin>**sddb t1 internal**

The request was updated successfully in startup-config.

MG-IP-1 R03.01.01_D001-202

After the Restart follow the bellow command line:

MG-IP:**\c\top\ssd all**

(Disable all running sessions)

MG-IP:**\c\wan\sce 100 full**

(Set internal WAN interface to work 100 FDX)

MG-IP:**\d\d\scep wan off**

(Disable the PHY on WAN port)

MG-IP:**\d\d\scep lan on 5**

(Set PHY address to 5 on the LAN port)

MG-IP:**\c\g\scp MG-IP-1**

(Optional, Change your CLI Prompt to your Prompt)

MG-IP:**\c\top\scfg\ccip all 169.254.1.100 0x5** –

(Set all sessions to Priority 5, to get highest priority on the internal switch, and best QoS settings for E1/T1 ports. IP address is changed according to your settings.)

MG-IP:**\c\top\sse all**

(Set all sessions to enable mode)

MG-IP:**\c\rr**

(Replace Reload)

Internal Testing

The diagnostics directory contains the fts command to run the internal test. This test exercises the MG-IP by routing traffic through all the device interfaces and checking for correct performance. The command performs a device reset, both before and after the test.

The following setup must be done for the function to operate successfully:

- Connect the LAN/Management (rear) interface to the WAN interface using an Ethernet cross-cable.
- Connect an external loopback connector to all four T1/E1 connectors.

While the command is running, the MG-IP's SYS OK LED displays the status:

- Alternating red/green indicates the test is proceeding without error.
- Flashing red indicates the test has detected a failure.

If the test was set to run continuously or for a long interval, the user can cycle the power to stop the test. When the test completes, the device is reset and the version string is sent to the CONSOLE.

MG-IP-1:\Diagnostics>**fts 2**

Self test will start for 2 seconds.

Board Test: successful iteration: 0

Board Test: successful iteration: 1

Board Test: ENDED SUCCESSFULLY

MG-IP-1 R03.01.01_D001-202

The second example below was run with no loopback set.

MG-IP-1:\Diagnostics>**fts 2**

Board Test: successful iteration: 0

Failed interface: 2, in-frames=0, frames-discards=0, bytesdiscards=0

**** SELF TEST FAILED **** (continue scan) : 1

Board Test: TEST FAILED!!!!!!!:

MG-IP-1 R03.01.01_D001-202

After the test completes the system resets.

Hardware Status

Various hardware features report status back to the console. As noted in Table 18, the commands are spread throughout the directory structure for the convenience of the user.

gsb may be run from the \config, \monitor, and \diagnostics directories. gbd may only be executed from the \admin directory.

MG-IP-1:\Config>**gsb**

Power up test succeeded

Interface LAN link.....: DOWN

Interface WAN link.....: DOWN

	Port1	Port2	Port3	Port4
Interface T1 link.....:	DOWN	DOWN	DOWN	DOWN

MG-IP-1:\Config>..**a**

MG-IP-1:\Admin>**gbd**

Board information

Card type ..... :	0x5-0 (CMX ppm+)
CPLD version..... :	0
FLASH data ..... :	FUJITSU 4 Meg
DRAM size..... :	64 MB
SW checksum..... :	0x1aeed028
FPGA id ..... :	0x6
FPGA version..... :	0x6
Shift register value ..... :	0xf

Firmware Status

The firmware information may be displayed only from the \admin directory using gfs, Get Firmware Status.

MG-IP-1:\Admin>**gfs**

Current version.....:	R03.01.00_D012
Internal version.....:	AeGf1g6h1i4j
SW Checksum.....:	0x1AEED028

The firmware version may be displayed from the \config or \monitor directories:

MG-IP-1:\Config>**gv**

MG-IP-1 R03.01.01_D001-202

“R” is for “Release”. The first two digits after “R” represent the major portion of the release number. The next two digits represent the minor release number. The remaining numbers are restricted use only.

Database Configuration

gcds is only run from the \admin directory. It displays the current database name and

version number, sizing information, and the model template.

MG-IP-1:\Admin>**gcds**

Internal DB name.....:	Aarb0c1d6e0f
Customer DB name.....:	MG-IP-1
CLI prompt .....:	MG-IP-1
(Original version) .....:	3.0.0*

Current version.....: 3.0.0*

Customer serial num .....: -

Validity .....: Yes

Max available size.....: 65536

Current size .....: 4366

Model template .....: R1601ETEA0000

Master model template.: R1601ETEA0000

To reload the database and discard all changes made to the modified running configuration, change directory to the \config directory. Then run rl. rl returns the system to the state since the previous restart or replace.

MG-IP-1:\Config>rl

MG-IP-1 R03.01.01_D001-202

In order to replace the startup configuration with the modified running configuration issue an rp, Replace, command.

MG-IP-1:\Config>rp

The command completed successfully.

The rl and rp commands are conveniently grouped together in the rr command, Replace and Reload, which performs them both in a single step.

MG-IP-1:\Config>rr

MG-IP-1 R03.01.01_D001-202

Login:

Date and Time

Time is set on the MG-IP from the \Admin directory. Note that the date is day, then month, then year. The default date is January 1, 1970.

MG-IP-1:\Admin>**gdt**

Current date: 1 Jan 1970

Current time: 00:07:00

System uptime: 0 days, 00:07:00 (930 ms)

Set the date using the sdt command. Again, note that the format is days first (dd), followed by the month (mmm) in character format, followed by a four digit year (yyyy).

The time fields are optional and take the form of hours (hh):minutes (mm):seconds (ss).

MG-IP-1:\Admin>**sdt 19/Jul/2006 03:28**

Date and time set successfully.

Current date: 19 Jul 2006

Current time: 03:28:00

System uptime: 0 days, 00:11:03 (970 ms)

Current CLI Prompt

The CLI prompt may be customized using the scp, Set CLI Prompt, command from the \Config\General directory. To see the current prompt use the gcp, Get CLI Prompt, command.

```
MG-IP-1:\Config\General>gcp
                                Running_config   Modified Running_con
        CLI prompt.........:    MG-IP-1          Test1
```

Go back to the \Config directory and run rr to replace and reload. Upon log-in the new prompt is evident.

```
MG-IP-1:\Config>rr
MG-IP-1 R03.01.00_D012-202
Login: admin
Password:
MG-IP-1 R03.01.00_D012-202
Test1:\>
```

Global Configuration Status

Two commands show the configuration and status of the Ethernet (LAN and WAN) and the T1/E1 interfaces: gci, and gsi. gci and gsi both run from the \Config or \Monitor directories, display a quick glance subset of the configuration and status of the interfaces.

Refer to Managing LAN and WAN Interfaces on page 83, Managing the T1/E1 Interface on page 91 and **Ошибка! Источник ссылки не найден.** on page **Ошибка! Закладка не определена.** for configuration and more defined status of each interface and the module application.

MG-IP-1:\Config>gci

LAN interface configuration

```
LAN interface configuration
                                Running_config      Modified Running_config
Working mode..................... :  ETH             ETH
AutoNeg ............................ :  On              On
Speed (Mb/s) ...................... :  -               -
Duplex mode ....................... :  -               -
Interface BW (kb/s) ........... :  Unlimited         Unlimited
MAC address....................... :  00-50-C2-15-15-7B  00-50-C2-15-15-7B
IP config mode .................... :  Static IP        Static IP
IP address ......................... :  169.254.1.100    169.254.1.100
Subnet mask ....................... :  255.255.255.0    255.255.255.0
T1 interface configuration
                                Running_config      Modified Running_config
Working mode..................... :  Bitstream       Bitstream
```

```
LIU line format..................... :  T1                    T1
Clocking mode ................... :  Internal-master        Internal-master
Port 1 state ........................ :  Enabled               Enabled
Active Profile ..................... :  Profile_1             Profile_1
WAN interface configuration
                                        Running_config         Modified Running_config
Working mode..................... :  ETH                   ETH
AutoNeg ............................ :  -                     -
Speed (Mb/s)  ..................... :  -                     -
Duplex mode ..................... :  -                     -
Interface BW (kb/s)  ........... :  Unlimited             Unlimited
MAC address..................... :  00-50-C2-15-15-7A     00-50-C2-15-15-7A
IP config mode ................... :  Static IP             Static IP
IP address ......................... :  169.254.1.100         169.254.1.100
Subnet mask ..................... :  255.255.255.0         255.255.255.0
```

```
MG-IP-1:\Config>gsi
LAN interface configuration
Link..................................... :  DOWN
PHY status ......................... :  Working
AutoNeg............................... :  -
Peer advertisement value .... :  -
Speed (Mb/s) ..................... :  -
Duplex mode..................... :  -
Flow control..................... :  -
MAC loopback................... :  Disabled
DHCP client state............... :
DHCP server ip................... :  Request sent

T1 interface configuration
link status ............................ :  Port1
---------------------:                  -----
Link..................................... :  DOWN
LIU loopback ..................... :  Disable
LIU database loopback ..... :  Disable
Alarm Status ..................... :  los

WAN interface configuration
Link..................................... :  DOWN
```

Link..... :	Working
AutoNeg	-
Peer advertisement value .... :	-
Speed (Mb/s) ..... :	-
Duplex mode..... :	-
Flow control..... :	-
MAC loopback..... :	Disabled

Managing LAN and WAN Interfaces

This section covers configuring the WAN interface and the LAN/Management (rear) interface.

The MG-IP is designed to stream data from the T1/E1 circuit to the WAN interface, which in turn connects over a network to other receiving devices. Data traffic from the LAN interface can be multiplexed with the packetized TDM data and sent to the packet network via the WAN. This section describes how to configure the LAN/Management and WAN interfaces. For information on configuring the T1/E1 port, refer to Managing the T1/E1 Interface on page 91 and **Ошибка! Источник ссылки не найден.** on page **Ошибка! Закладка не определена.**.

The same configuration commands are used to configure the LAN and the WAN, although the directory is different. While this discussion focuses on the LAN, the system administrator can apply the same actions in the WAN directory.

The first connection to the MG-IP is through the CONSOLE. Upon configuration of the LAN it is then possible to perform all management monitoring and configuration tasks using the LAN.

LAN/WAN Management Tasks

The LAN/Management (rear) interface commands are found in the \Config\LAN directory, and the WAN interface commands are found in the \Config\WAN directory, unless otherwise noted. Refer to Appendix A for an alphabetical list of commands (page A-1).

Table 19: LAN/WAN Management

Action	Comand
Display configuration information about the interface	gc (see page A-26 in Appendix A) or WAN \Config\gci (see page A-32 in Appendix A) \Config\gsi (see page A-59 in Appendix A)
Display and/or reset the status and statistics for the interface	gs (see page A-55 in Appendix A) gst (see page A-52 in Appendix A) gss (see page A-48 in Appendix A)
Configure the Ethernet settings	sce (see page A-88 in Appendix A) scef (see page A-89 in Appendix A) cel (see page A-90 in Appendix A)

Action	Comand
Set or display the Gateway IP address	\Config\General\sdg (see page A-98 in Appendix A) \Config\General\gdg (see page A-35 in Appendix A)
Set IP and subnet address for the interface	sic (see page A-105 in Appendix A)
Display the MAC address for the link	\Config\General\gma (see page A-42 in Appendix A)
Enable or disable MAC loopback	sdml (see page A-99 in Appendix A)
Apply changes	ac (see page A-9 in Appendix A)

Ethernet Interface Information

The \Config\LAN directory, and the identical \Monitor directory, contains the gc, gs, gss and gst commands. Both gc and gs give more detailed information about the particular interface than gci and gsi. gss and gst provide statistical information regarding the interface.

gc Command

The GetConfiguration command in the \Config\LAN directory shows five parameters not displayed with gci: Interface type, MAC loopback, PHY configured, PHY number and advertisement. The parameters highlighted in this list are configurable. Each configurable parameter is further discussed below this list.

MG-IP-1:\Config\LAN>**gc**

	Running_config	Modified Running_config
Working mode .....:	ETH	ETH
Interface type .....:	MII	MII
AutoNeg.....:	On	On
Speed (Mb/s) .....:	-	-
Duplex mode.....:	-	-
Flow control.....:	Disabled	Disabled
Interface BW (kb/s) .....:	Unlimited	Unlimited
MAC address .....:	00-50-C2-15-15-7B	00-50-C2-15-15-7B
MAC loopback.....:	Disabled	Disabled
PHY configured .....:	Yes	Yes
PHY number .....:	5	5
Advertisement.....:	10F 100H 100F	10F 100H 100F
IP config mode.....:	Static IP	Static IP
IP address.....:	169.254.1.100	169.254.1.100
Subnet mask.....:	255.255.255.0	255.255.255.0

Table 20: Ethernet Configuration Commands

Parameter	CLI	CLI Name	CLI Page
AutoNeg	sce	SetConfigEth	page A-88 in Appendix A
Speed	sce	SetConfigEth	page A-88 in Appendix A
Duplex Mode	sce	SetConfigEth	page A-88 in Appendix A
Flow Control	scef	SetConfigEthFlowControl	page 0A-89 in Appendix A
Interface BW	cel	SetConfigEthLimit	page A-90 in Appendix A
IP address	sic	SetIPConfig	page A-105 in Appendix A
MAC loopback	sdml	SetDynamicMACLpbk	page A-99 in Appendix A

gs Command

The Get Status command in the \Config\LAN displays the same information as the gsi command run from the \Config directory. See Global Configuration Status on page 81.

gss Command

Another status command is the GetMibStatistics command. The four possible status reports are for the IP statistics, TCP statistics, UDP statistics and the ICMP statistics.

Display Mib statistics for IP:

```
MG-IP-1:\Config\LAN>gss i
Ip data mib2 statistics
Num of IP forwarding.....:  2
Num of IP time to live .....:  64
Num of IP in received.....:  5
Num of IP in header errors .....:  0
Num of IP in address errors.....:  0
Num of IP frward datagrams .....:  0
Num of IP in unknown protocols.....:  0
Num of IP in discards .....:  0
Num of IP in delivers.....:  5
Num of IP out requests .....:  1108
Num of IP out discards .....:  0
Num of IP out discards do routes.....:  0
Num of IP out discards do routes.....:  0
Num of IP reassembly Timeout.....:  60
Num of IP reassembly Required.....:  0
Num of IP reassembly Required.....:  0
Num of IP reassembly OKs .....:  0
Num of IP reassembly fails.....:  0
```

```
Num of IP fragment OKs.........................................:   0
Num of IP fragment Fails ......................................:   0
Num of IP fragment creates.....................................:   0
Num of IP routing discards.....................................:   0
```

Display Mib statistics for TCP:

```
MG-IP-1:\Config\LAN>gss t
Tcp data mib2 statistics
Tcp retransmitting algorithm................................ :   Unknown type
Num of TCP retransmitting min timeout ..............  :   0
Num of TCP retransmitting max timeout.............  :   0
Num of TCP max tcp connection........................ :   0
Num of TCP active open connections................... :   2
Num of TCP passive open connections................. :   1
Num of TCP attempt failes ................................ :   1
Num of TCP closed state from establised ............ :   0
Num of TCP current extablish or close w ............ :   0
Num of TCP In segments received ....................... :   5
Num of TCP Out segments received..................... :   7
Num of TCP segment retransmitted..................... :   0
Num of Tcp received in error................................ :   0
Num of Tcp sent contain RST flag..................... :   1

Tcp data mib2 connections
Tcp connection state........................................... :   established
Tcp Local ip addr connection................................ :   0x7f000001
Tcp Local port connection ................................... :   0x60b
Tcp Remote ip addr connection ............................ :   0x7f000001
Tcp Remote tcp connection................................... :   0x2b29

Tcp connection state........................................... :   established
Tcp Local ip addr connection................................ :   0x7f000001
Tcp Local port connection ................................... :   0x2b29
Tcp Remote ip addr connection ............................ :   0x7f000001
Tcp Remote tcp connection................................... :   0x60b
```

Display Mib statistics for UDP:

```
MG-IP-1:\Config\LAN>gss u
```

```
Udp data mib2 statistics
Num of in Udp datagram..................................... :    0
Num of in Udp datagram no port ........................... :    0
Num of in Udp datagram not delivered..................... :    0
Num of out Udp datagram not delivered..............  :    2

Udp data mib2 connections
Udp Local ip addr connection ............................... :    0x0
Udp Local port connection.................................... :    0xa1


Udp Local ip addr connection ............................... :    0x0
Udp Local port connection.................................... :    0x835

Udp Local ip addr connection ............................... :    0x7f000001
Udp Local port connection.................................... :    0x2b29

Udp Local ip addr connection ............................... :    0xa9fe0164
Udp Local port connection.................................... :    0x7d0

Display Mib statistics for ICMP:
MG-IP-1:\Config\LAN>gss c
Icmp data mib2 statistics
Num of ICMP in messages ................................... :    0
Num of ICMP in Errors ..................................... :    0
Num of ICMP in Dest unreachables ......................... :    0
Num of ICMP in time exceeded............................... :    0
Num of ICMP in parameter problem ......................... :    0
Num of ICMP in source quench............................... :    0
Num of ICMP in redirect ................................... :    0
Num of ICMP in echo request ............................... :    0
Num of ICMP in echo reply.................................. :    0
Num of ICMP in timestamp request ......................... :    0
Num of ICMP in timestamp replay........................... :    0
Num of ICMP in addr mask request.......................... :    0
Num of ICMP in addr mask replay........................... :    0
Num of ICMP out message.................................... :    0
Num of ICMP out errors .................................... :    0
Num of ICMP out dest unreachable.......................... :    0
```

```
Num of ICMP out time exceeded..........................: 0
Num of ICMP out parameter problem ................... : 0
Num of ICMP out source quench..........................: 0
Num of ICMP out redirect ..................................: 0
Num of ICMP out echo request ............................: 1107
Num of ICMP out echo replay ..............................: 0
Num of ICMP out timestamp request ...................: 0
Num of ICMP out timestamp replay ....................: 0
Num of ICMP out addr mask request....................: 0
Num of ICMP out addr mask replay .....................: 0
```

gst Command

gst displays the ethernet statistics for the LAN interface.

```
MG-IP-1:\Config\LAN>gst
In octets ................................ : 0
Out octets............................ : 126848
Frames received................... : 0
Frames transmitted ..............: 1982
In Frames multicast .............: 0
Out frames multicast............: 0
In Frames broadcast.............: 0
Out frames broadcast...........: 1982
Alignment errors.................: 0
CRC errors.........................: 0
Long frames.......................: 0
Short frames .......................: 0
```

MG-IP units support limited RMON statictics that may be displayed using this cli command. The folowing RMON counters are supported:

- etherStatsTable
- etherStatsDropEvents
- etherStatsOctets
- etherStatsPkts
- etherStatsCRCAlignErrors
- etherStatsUndersizePkts
- etherStatsOversizePkts
- etherStatsFragments
- etherStatsCollisions

cel command

This CLI is used to set the bandwith of the LAN/Management (rear interface) tarfic . Given the network bandwidth limit of the PSN (packet-switched network) connected to the WAN port, LAN port bandwidth should be calculated and limited (using cel CLI command) so as not to affect CES flow. For example, if the PSN bandwidth is assumed to be 10 Mbps and the MG-IP-4 uses four full E1/T1 connections (which add up to 9 Mbps required for CES flow), the LAN port bandwidth limit should be set to 1 Mbps.

To calculate the exact bandwidth required for the TDM CES flow (after the port and sessions have been configured), use the Config\TDM_Over_Packet>ggc CLI command and observe the “Enable session BW” and the “Disable session Bandwidth” fields. Add 1.8 Mbps overhead to their values.

The **cel** command is available only at the WAN directory.

MG-IP-1:\Config\WAN>cel 4000

The request was updated successfully in modified running_config.

Use \c\rr to restart the system.

Sample Ethernet Configuration

This is an example of setting the parameters for the LAN interface. Change directory to \Config\LAN. Execute the gc command to see the current status. Then change parameters using the commands listed in Table 20. After making the desired changes in the modified configuration database run gc again. The changes will be listed under the righthand header, “Modified Running Configuration.” If these changes are correct, run rr to replace the startup configuration and the restart the device.

MG-IP-1:\Config\LAN>gc

	Running_config	Modified Running_config
Working mode .....:	ETH	ETH
Interface type .....:	MII	MII
AutoNeg.....:	On	On
Speed (Mb/s) .....:	-	-
Duplex mode.....:	-	-
Flow control.....:	Disabled	Disabled
Interface BW (kb/s) .....:	Unlimited	Unlimited
MAC address .....:	00-50-C2-15-15-7B	00-50-C2-15-15-7B
MAC loopback.....:	Disabled	Disabled
PHY configured.....:	Yes	Yes
PHY number .....:	5	5
Advertisement.....:	10F 100H 100F	10F 100H 100F
IP config mode.....:	Static IP	Static IP
IP address.....:	169.254.1.100	169.254.1.100
Subnet mask.....:	255.255.255	255.255.255

Set the interface speed and enable full duplex mode:

MG-IP-1:\Config\LAN>**sce 100 full**

The request was updated successfully in modified

running_config.

Use ac to apply changes

Enable the flow control:

MG-IP-1:\Config\LAN>**scef on**

The request was updated successfully in modified

running_config.

Use ac to apply changes

Enter a new IP address and sub-net mask:

MG-IP-1:\Config\LAN>**sic static 10.100.1.5 255.255.255.128**

The request was updated successfully in modified

running_config.

The configuration change will be activated after the next Replace & Reload (\c\rr)

Display the configuration changes. Notice that only the modified configuration database contains the changes.

MG-IP-1:\Config\LAN>**gc**

	Running_config	Modified Running_config
Working mode .....:	ETH	ETH
Interface type .....:	MII	MII
AutoNeg.....:	On	Off
Speed (Mb/s) .....:	-	100
Duplex mode..... :l	-	Full
Flow control.....:	Disabled	Enabled
MAC address .....:	00-50-C2-15-15-7B	00-50-C2-15-15-7B
MAC loopback.....:	Disabled	Disabled
PHY configured .....:	Yes	Yes
PHY number .....:	5	5
Advertisement.....:	10F 100H 100F	-
IP config mode.....:	Static IP	Static IP
IP address.....:	169.254.1.100	10.100.1.5
Subnet mask.....:	255.255.255.0	255.255.255.0

Change directory to \Config and run rr to replace the startup configuration and restart the MG-IP:

MG-IP-1:\Config>rr

MG-IP-1 R03.01.01_D001-202

Login: admin

Password:

MG-IP-1 R03.01.01_D001-202

Change directory to \Config\LAN and run **gc**. The new values are now part of the running configuration database.

MG-IP-1:\Config\LAN>gc		
	Running_config	Modified Running_config
Working mode .....:	ETH	ETH
Interface type .....:	MII	MII
AutoNeg.....:	Off	Off
Speed (Mb/s) .....:	100	100
Duplex mode.....:	Full	Full
Flow control.....:	Enabled	Enabled
Interface BW (kb/s) .....:	2000	2000
MAC address .....:	00-50-C2-15-15-7B	00-50-C2-15-15-7B
MAC loopback.....:	Disabled	Disabled
PHY configured.....:	Yes	Yes
PHY number .....:	5	5
Advertisement.....:	-	-
IP config mode.....:	Static IP	Static IP
IP address.....:	10.100.1.5	10.100.1.5
Subnet mask.....:	255.255.255.128	255.255.255.128

It is possible to set all Ethernet and MAC layer configuration options dynamically using the ac (ApplyChanges) CLI command, without the need to perform Replace & Reload (\c\rr). However, one must make sure that no pesudowire sessions are active when using this command.

Managing the T1/E1 Interface

This section describes how to manage the T1/E1 port on the MG-IP. This section describes only the configuration performed prior to, and in preparation for, running the TDM over Packet application on the port. For more information about TDM over Packet and Sessions, refer to **Ошибка! Источник ссылки не найден.** on page **Ошибка! Закладка не определена.**.

The port is primarily configured by setting the parameters in Profile_1. The Profile configuration can be viewed from the \Config\T1\Profile_1 directory. The port configuration is available through the gc command in the \Config\T1\Port_1 directory. The configuration information may also be obtained from the corresponding \Monitor directories.

Due to the nature of the port-session relationship, and in order not to disrupt port traffic intentionally, any changes made to the port, such as a change in session management, require disabling and enabling of the session and/or disabling and enabling the port.

T1/E1 Management Tasks

The following commands to manage the T1/E1 interface are found in the \Config\T1 (or \Config\E1) directory, or in a subdirectory of this directory (profile definition or port definition), unless otherwise noted. Commands are listed alphabetically in Appendix A.

Table 21: T1/E1 Management CLI Commands

Action	\Config\T1	..\Port_1	..\Profile_1
Display configuration information about the interface.	**gc** (see page A-26 in Appendix A) **gmcp** (see page A-43 in Appendix A) **grcp** (see page A-46 in Appendix A)	**gc** (see page A-26 in Appendix A)	**gc** (see page A-26 in Appendix A)
Display status information.	**gs** (see page A-55 in Appendix A)	**gs** (see page A-55 in Appendix A)	
Display the SNMP statistics		**gss** (see page A-48 in Appendix A)	
Display and/or reset statistics about the interface	**gst** (see page A-52 in Appendix A)	**gst** (see page A-52 in Appendix A)	
Enable/disable the interface	**spoe** (see page A-114 in Appendix A) **spod** (see page A-113 in Appendix A)		
Configure the state of a port		**spos** (see page A-115 in Appendix A)	
Configure the channel bandwidth		**scb** (see page A-80 in Appendix A)	
Configure framing parameters		**sfp** (see page A-103 in Appendix A)	
Configure LIU line build out		**sfp** (see page A-103 in Appendix A)	**sltt** (see page A-91 in Appendix A)
Configure LIU line coding			**sllc** (see page A-92 in Appendix A)
Configure LIU line Rx termination			**slrt** (see page A-93 in Appendix A)
Configure LIU loopback	**sll** (see page A-109 in Appendix A) **sldl** (see page A-108 in Appendix A)	**sll** (see page A-109 in Appendix A) **sldl** (see page A-108 in Appendix A)	**slrt** (see page A-93 in Appendix A)
Configure LIU Rx equalizer gain limit.	**sll** (see page A-109 in Appendix A) **sldl** (see page A-108 in Appendix A)	**sll** (see page A-109 in Appendix A) **sldl** (see page A-108 in Appendix A)	**sreg** (see page A-119 in Appendix A)

Clocking Mode Configuration

The folowing CLIs are located in the \Config\clk directory and are used to configure and monitor the clocking mode on the system.

Action	CLI	Comments
Configure mode	**sccm** (see page A-82 in Appendix A)	
Set external clock frequency	**secf** (see page A-102 in Appendix A)	direct/differential timing
Connect clock to session	**ccts** (see page A-16 in Appendix A)	adaptive/differential timing
Set active clock	**sac** (see page A-78 in Appendix A)	adaptive/differential timing
Get config	**gc** (see page A-26 in Appendix A)	
Set external clock direction	**secd (**see page A-101 in Appendix A)	
Get clock status	**gcs (**see page A-25 in Appendix A)	
List clocks	**lc (**see page A-66 in Appendix A)	

To configure differential timing:

- Use the **sccm** CLI to set the mode to differential
- Use the **secf** command to set external clock frequency
- Use the **ccts** command to select primary/secondary sessions as the source for the differential clock recovery algorithm

To configure adaptive timing:

- Use the **sccm** CLI to set the mode to adaptive
- Use the **ccts** command to select primary/secondary sessions as the source for the differential clock recovery algorithm

To configure external timing:

- Use the **sccm** CLI to set the mode to external
- Use the **secf** command to set the external clock frequency

T1/E1 Interface Information

Information about the T1/E1 circuits is made available through five “get” information commands. Two commands, gc, and gs, show the configuration and status of the T1/ E1 interface. Both execute from the \Config\T1 (or E1) or \Monitor\T1 (or E1) directories. In addition gst, Get Statistics, displays statistical information about the port. grcp and gmcp, Get Running Config Ports and Get Modified Running Config Ports, display the current running configuration and the modified configuration for all ports. An additional status command, gss, Get SNMP Statistics, is only valid in the port directories.

For clarity the following sections are divided by major “get” information commands. Each section is further divided between the T1/E1 level, the port level and the profile level. Even though there are parameters listed within a configuration report that are configurable, only those that are configurable at the current level are discussed within the section. For example, LIU line format is a configurable

parameter from the \Admin directory using the sddb command. However, it is not highlighted in the T1/E1 level because it cannot be configured from the T1/E1 level.

gc Command

From the \Config\T1 directory the gc command displays high level port and profile information.

\Config\T1 Directory

```
MG-IP-1:\Config\T1>gc
                                  Running_config   Modified Running_config
Working mode ................ :   Bitstream        Bitstream
LIU line format ............... :  T1               T1
Frame size (bytes) ........... :   100              100
Underrun value ............... :   0xFE             0xFE
Clocking mode................ :   Line 1           Line 1
Tx clock polarity ............ :   Rising           Rising
Rx clock polarity............ :   Falling          Falling
Port 1 state ................ :   Enabled          Enabled
Active Profile................ :   Profile_1        Profile_1
```

Table 22: T1/E1 Configuration

Parameter	CLI	CLI Name	Reference
Frame size			
Clocking mode	**sccm**	Set Config Bitstream Clocking Mode	page A-82 in Appendix A
Dis/Enabled	**spod,** **spoe**	Set Ports Enable, Set Ports Disable	page A-114 in Appendix A, page A-113 in Appendix A

\Config\T1\Port_1 Directory

Transitioning to the Port_1 directory, the gc command displays the current port configuration. In the following example, please note the difference between the running config and the modified running config regarding the parameter “Framed mode”. “Framed mode” is set from the TDM over Packet directories and will be further discussed in the emulation context. The “Channel bandwidth” parameter depends on a structured mode setting in “Framed mode”. Therefore, the example shows the modified running config “Framed mode” parameter as structured.

```
MG-IP-1:\Config\T1\Port_1>gc
                                  Running_config   Mod. Running_config
Port 1 state.................................:   Enabled          Enabled
Active Profile ..............................:   Profile_1        Profile_1
LIU line format .............................:   T1               T1
LIU type ....................................:   DS21458          DS21458
LIU line code ...............................:   B8ZS             B8ZS
LIU line build out...........................:   T1_133           T1_133
LIU Rx term..................................:   100ohm          100ohm
```

LIU monitor gain .....:	Norm	Norm
LIU Rx equalizer gain limit .....:	Short	Short
LIU jitter attenuation.....:	Rx-path	Rx-path
LIU loopback .....:	Disabled	Disabled
Framed mode .....:	Unframed	ESF
Channel bandwidth .....:	-	56K
TDM signaling type .....:		OOSF+CAS

Table 23: Port Configuration

Parameter	CLI	CLI Name	Reference
Port_1 state	**spos**	Set Port State	page A-115 in Appendix A
LIU loopback	**sll** **sldl**	Set LIU Loopback, Set dynamic LIU loopback	page A-109 in Appendix A, page A-108 in Appendix A
Framed mode	**sfp**	Set the framing mode	page A-103 in Appendix A
Channel Bandwidth	**scb**	Set Channel Bandwidth	page A-80 in Appendix A

\Config\T1\Profile_1 Directory

Transitioning to the Profile_1 directory, the gc command displays the current profile configuration.

MG-IP-1:\Config\T1\Profile_1>**gc**

	Running_config	Mod. Running_config
LIU type ..... :	DS21458	DS21458
LIU line code..... :	B8ZS	B8ZS
LIU line build out ..... :	T1_133	T1_133
LIU Rx term ..... :	100ohm	100ohm
LIU monitor gain..... :	Norm	Norm
LIU Rx equalizer gain limit..... :	Short	Short
LIU jitter attenuation ..... :	Rx-path	Rx-path

Table 24: Profile Configuration

Parameter	CLI	CLI Name	Reference
LIU line code.....:	sllc	SetConfigLIULineCode	page A-92 in Appendix A
LIU line build out.....:	sltt	SetConfigLIULineBuildout	page A-91 in Appendix A
LIU Rx term .....:	slrt	SetConfigLIURxTerm	page A-93 in Appendix A
LIU Rx equalizer gain limit.....:	sreg	SetRxEqualizerGainLimit	page A-119 in Appendix A

gs Command

\Config\T1 Directory

From the \Config\T1 directory the gs command displays port information for each port.

```
MG-IP-1:\Config\T1>gs
Status of interface
link status ......................... :    Port1
----------------------                    -----
Link ................................ :    DOWN
LIU loopback ................... :    Disable
LIU database loopback..... :    Disable

TDM Tx Clock Source.....:    LoopBack
dsx1NoAlarm.............:    -
dsx1RcvFarEndLOF........:    -
dsx1RcvAIS..............:    -
dsx1XmtAIS..............:    -
dsx1LossOfFrame.........:    los
dsx1LossOfSignal........:    -
dsx1LoopbackState.......:    -
dsx1RcvFarEndLOMF.......:    -
dsx1XmtFarEndLOMF.......:    -
```

Table 25: T1/E1 LIU loopback

Parameter	CLI	CLI Name	CLI Page
LIU database loopback	sll, sldl	SetLIULpbk SetLIUDynamicLpbk	page A-109 in Appendix A, page A-108 in Appendix A

Config\T1\Port_1 Directory

From the \Config\T1\Port_1 directory the gs command displays status about the specific port.

```
MG-IP-1:\Config\T1\Port_1>gs
Link ............................................ :    DOWN

LIU loopback......................:    Disable
LIU database loopback.............:    Disable

dsx1NoAlarm.......................:    -
dsx1RcvFarEndLOF..................:    -
dsx1RcvAIS........................:    -
dsx1LossOfFrame...................:    -
dsx1LossOfSignal..................:    los
```

```
dsx1LoopbackState.................:        -
dsx1RcvFarEndLOMF.................:        -
dsx1XmtFarEndLOMF.................:        -
```

Table 26: PortLIU loopback

Parameter	CLI	CLI Name	CLI Page
LIU database loopback	sll, sldl	SetLIULpbk SetLIUDynamicLpbk	page A-109 in Appendix A, page A-108 in Appendix A

gst Command

The gst command shows transmission information for the T1/E1 circuit. At the port level the only statistics available are Mib statistics. See **Ошибка! Источник ссылки не найден.** on page **Ошибка! Закладка не определена.** for more information.

\Config\T1

```
MG-IP-1:\Config\T1>gst
Bitstream statistics on T1 interface

                                Port1
                                -----
In octets .............:       2192909092
Out octets............:        2192909092
Frames received.........:      10492388
Frames transmitted......:      10492388
TDM Tx Clock Source.....:      LoopBack
```

\Config\T1\Port_1 Directory

```
MG-IP-1:\Config\T1\Port_1>gst m
Interface name................................ :  Port_1
Interface type ............................... :  T1 device
Largest datagram.............................. :  100
Interface speed .............................. :  1544000
Admin link status ............................ :  Link-up
Oper link status ............................. :  Link-down
Oper link last changed....................... :  0 days 0h:0m:1s
In octets..................................... :  550025091
Out octets ................................... :  550025091
```

grcp Command

This command is only valid in the \Config\T1(E1) or \Monitor\T1(E1) directories. his command shows all the running configuration database information for the T1/ 1 circuit. All the configurable parameters have been discussed in the sections above.

```
MG-IP-1:\Config\T1>grcp

Running_config..............................  :   Port1
-------------------                                -----
port state ....................................  :   Enabled
Active Profile ................................  :   Profile_1
LIU line format................................  :   T1
LIU type ......................................  :   DS21458
LIU line code..................................  :   B8ZS
LIU line build out.............................  :   T1_133
LIU Rx term ...................................  :   100ohm
LIU monitor gain...............................  :   Norm
LIU Rx equalizer gain limit....................  :   Short
LIU jitter attenuation.........................  :   Rx-path
LIU loopback...................................  :   Disabled
LIU database loopback..........................  :   Disabled
Framed mode....................................  :   Unframed
```

gmcp Command

This command is only valid in the \Config\T1(E1) or \Monitor\T1(E1) directories. his command shows all the modified running configuration database information egarding the T1/E1 circuit. All the configurable parameters have been discussed in the ections above.

```
MG-IP-1:\Config\T1>gmcp
Modified
Running_config ................................  :   Port1
-------------------                                -----
port state.....................................  :   Enabled
Active Profile.................................  :   Profile_1
LIU line format................................  :   T1
LIU type.......................................  :   DS21458
LIU line code..................................  :   B8ZS
LIU line build out.............................  :   T1_133
LIU Rx term....................................  :   100ohm
LIU monitor gain...............................  :   Norm
LIU Rx equalizer gain limit....................  :   Short
LIU jitter attenuation.........................  :   Rx-path
```

```
LIU loopback ..................................:  Disabled
Framed mode ...................................:  Framed
Frame format...................................:  ESF
Channel bandwidth .............................:  56K
TDM signaling type ............................:  OOSF+CAS
```

gss Command

This command is only valid in the \Config\T1(E1)\Port_1 directory. gss displays the Mib information for the port. Refer to Managing SNMP on page 125 for more information.

T1/E1 Example Configuration

This section describes simple T1/E1 configuration. More extensive use of the commands is covered in **Ошибка! Источник ссылки не найден.** on page **Ошибка! Закладка не определена.**.

This example sets individual port characteristics and establishes the more global T1 configurations.

```
MG-IP-1:\Config\T1>?
sccm        SetConfigBitstreamClockingMode
spoe        SetPortsEnable
spod        SetPortsDisable
Gst         GetStatistics
Gc          GetConfig
Gs          GetStatus
grcp        GetRunningConfigPorts
gmcp        GetModifiedConfigPorts
Sll         SetLIULpbk
Sldl        SetLIUDynamicLpbk
<dir> P1    Port_1
<dir> Pf1   Profile 1
```

```
MG-IP-1:\Config\T1\Profile_2>gc
                                        Running_config    Mod. Running_config
LIU type ......................................... :                   DS21458
LIU line code..................................... :                   B8ZS
LIU line build out ............................... :                   T1_133
LIU Rx term ...................................... :                   100ohm
LIU monitor gain ................................. :                   Norm
LIU Rx equalizer gain limit....................... :                   Short
LIU jitter attenuation ........................... :                   Rx-path
```

Set the LIU line code:

MG-IP-1:\Config\T1\Profile_2>**sllc ami**

The request was updated successfully in modified running_config.

Use \c\rp to save the modified running_config

Disable and enable the port(s) (spoe/spod or p#\spos) to activate the changes

Set the LIU line build out:

MG-IP-1:\Config\T1\Profile_2>**sltt T1_266**

The request was updated successfully in modified running_config.

Use \c\rp to save the modified running_config

Disable and enable the port(s) (spoe/spod or p#\spos) to activate the changes

Set the LIU Rx term:

MG-IP-1:\Config\T1\Profile_2>**slrt TermDis**

The request was updated successfully in modified running_config.

Use \c\rp to save the modified running_config

Disable and enable the port(s) (spoe/spod or p#\spos) to activate the changes

Set the Gain limit:

MG-IP-1:\Config\T1\Profile_2>**sreg Long**

The request was updated successfully in modified running_config.

Use \c\rp to save the modified running_config

Disable and enable the port(s) (spoe/spod or p#\spos) to activate the changes

Display the current modified configuration for this profile:

MG-IP-1:\Config\T1\Profile_2>**gc**

	Running_config	Modified. Running_config
LIU type .....:		DS21458
LIU line code .....:		AMI
LIU line build out.....:		T1_266
LIU Rx term .....:		TermDis
LIU monitor gain.....:		20db
LIU Rx equalizer gain limit .....:		Long
LIU jitter attenuation.....:		Rx-path

Transition back to the \Config\T1 directory and list the directory. Under Profile_1 is the new Profile_2 directory.

MG-IP-1:\Config\T1>**?**

sccm	SetConfigBitstreamClockingMode
spoe	SetPortsEnable
spod	SetPortsDisable

Gst	GetStatistics
Gc	GetConfig
Gs	GetStatus
grcp	GetRunningConfigPorts
gmcp	GetModifiedConfigPorts
Sll	SetLIULpbk
Sldl	SetLIUDynamicLpbk
<dir> P1	Port_1
<dir> Pf1	Profile 1

Managing a Single Port

Transition to Port_1 under the \Config\T1 directory. If the system retains the configuration from the above steps, the gs command dispalys the status for port 1. The gc command displays LIU parameters for this port.

Loopback

Set the LIU loopback parameter using the dynamic loopback command. This command does not change the configuration and allows non-permanent changes to occur:

MG-IP-1:\Config\T1\Port_1>**sldl Remote**

The command completed successfully.

MG-IP-1:\Config\T1\Port_1>**gs**

Link.....:	IN-TEST
LIU loopback.....:	**Remote**
LIU database loopback.....:	**Remote**

TDM Tx Clock Source.....:	**LoopBack**
Dsx1NoAlarm.....:	**no alarm**
Dsx1RcvFarEndLOF.....:	**-**
Dsx1RcvAIS.....:	**-**
Dsx1XmtAIS.....:	**-**
Dsx1LossOfFrame.....:	**-**
Dsx1LossOfSignal.....:	**-**
Dsx1LoopbackState.....:	**los**
Dsx1RcvFarEndLOMF.....:	**-**
Dsx1XmtFarEndLOMF.....:	**-**

The gc command displays no change to the running configuration or the modified configuration,

MG-IP-1:\Config\T1\Port_1>**gc**

	Running_config	Mod. Running_config
Port 1 state ..... :	Enabled	Enabled
Active Profile..... :	Profile_2	Profile_2
LIU line format..... :	T1	T1
LIU type ..... :	DS21458	DS21458
LIU line code..... :	AMI	AMI
LIU line build out ..... :	T1_133	T1_266
LIU Rx term ..... :	TermDis	TermDis
LIU monitor gain..... :	20db	20db
LIU Rx equalizer gain limit..... :	Long	Long
LIU jitter attenuation ..... :	Tx-path	Tx-path
LIU loopback..... :	**Remote *DB***	**Remote**
Framed mode..... :	Unframed	Unframed

Framing Parameters

TDM ports should be disabled prior to setting framing mode.

No session timeslot assignments are allowed prior to setting of this mode.

Run sfp to set framing parameters. This command will be explained in the context of the TDM over Packet Configuration Commands on page 157.

MG-IP-1:\Config\T1\Port_1>**sfp esf**

Channel Bandwidth

Run scb, Set Channel Bandwidth. The channel bandwidth parameter cannot be changed while the port is in unstructured mode, which is the system default for all ports., If the system is in its startup configuration issuing scb at this time will cause an error message. This command will be explained in the context of the TDM over Packet commands.

MG-IP-1:\Config\T1\Port_1>**scb 56k**

Bitstream port is in unframed mode. Cannot configure port bandwidth.

Configure the state of the port

A port is either enabled or disabled. The default for each port is enabled. The spos command, located in the port_1 directory, is used to change the port state.. To change the status transition to the Port_1 directory:

MG-IP-1:\Config\T1\Port_1>**spos disable**

The request was updated successfully in modified running_config.

Use \c\rp to save the modified running_config

Port(s) state was changed successfully

For a complete understanding of the T1/E1 circuit, continue with the next section, **Ошибка! Источник ссылки не найден.**.

To retain any changes made to the modified running configuration in the above example, execute the \c\rr, Replace and reload, command.

Managing the MG-IP unit

After understanding the physical management of the LAN/WAN and the T1/E1 circuit, we are now ready to manage traffic through the MG-IP. The MG-IP-1 and MG-IP-4 can redefine pseudowire parameters without requiring a module restart.

Traffic flow depends on the mode of the T1/E1 circuit, which can be structured or unstructured and on the session definition used to configure the pseudowire. Structured implies knowing components and boundaries. In this context, a structured circuit means that framing and signaling information (see Out of Stream Signaling on page 103), conform to known standards. The device on the receiving end of the pseudowire also knows and expects the data stream in a particular format. Unstructured mode means that nothing is known about the data stream: no framing, no time slots, no signaling information.

Sessions and Pseudowires

A Session is a set of rules governing, on one side, a selection of a whole or fraction of a TDM circuit entering the module, and on the other side, the pseudowire data leaving the module for the Packet Switched Network. For this discussion we speak about the session definition and session destination as one entity: a session.

In unstructured mode all timeslots from the port are assigned to one destination. The data stream from the port, by definition, has no discernible time slots or other signaling information. The data stream is packetized according to the session header and other session parameters and then sent to the PSN.

In structured mode, all or a portion of the traffic from the port may be sent to the target destination.

Additional manipulation of the data stream occurs when, within the structured mode, a session defines the data stream as pcm30 in E1 or at a 56K data rate in T1. The module then detects signaling information, depending on the circuit type, strips the stream of its signaling information, sends only the data time slots, and when necessary, sends a signaling packet stream to indicate a change in signaling information.

The relationship between the port configuration and the session configuration is intricate. Care must be taken when configuring the module, and configuring the receiving end.

For instance, data entering from port 1, where port 1 is in unstructured mode, must go to a destination, defined by a session, that expects unstructured data.

Out of Stream Signaling

Out-of -stream CAS signaling occurs only when the configuration of the data stream contains signaling information. For example, in E1 mode, the pcm30 framing format is assumed to contain signaling information in time slot 16, as well as framing information in time slot 0, while pcm31 assumes that time slot 16 is a voice channel. In E1 mode out-ofstream signaling can only happen when the port is configured for pcm30. In T1 mode, outof- stream signaling may be present in either ESF or D4 mode, but out-of-stream signaling is assumed only when T1 runs with a channel data rate of 56Kbps.

The MG-IP-1 and MG-IP-4 support, for T1 and E1, Channel Associated Signaling (CAS), where a set of bits is used to replicate opening and closing the circuit (as if picking up the telephone receiver and pulsing digits on a rotary phone), or using tone signaling which is passed through on the voice circuits themselves.

In order to lessen the bandwidth usage and speed the data flow, the signal information is stripped from the stream and an interrupt is sent to the processor. The processor packages the signaling information as an out-of-stream message (which may optionally be sent through a separate pseudowire) and repackages the remainder of the data in the stream as it leaves the module according to the agreed upon protocol. In this way the stream does not carry the signaling information, and thus uses less bandwidth.

T1 Framing

Both the Extended Super Frame (ESF) mode and the D4 mode are valid for T1 in structured mode. The T1 data rate is split into 24 time slots, each being allocated 8 bits in turn, for a total of 192 bits. The selected protocol defines a bit pattern in the 193rd bit across a predetermined number of frames. When the port has a channel data rate of 64K, all eight bits of the channel are dedicated; no signal information is carried. However, when the port has a channel rate of 56k, only seven bits of the channel are dedicated, and the eighth bit is reserved for signaling information, contained in the “robbed bit” every sixth frame.

T1 data at a 56K data rate, whether ESF or D4, is sent from the PBX (in our example) to the MG-IP. There the eighth bit is stripped from the channel. The remaining 7 bits of channel information are packetized and sent out to the Packet Switched Network. When the module detects a change in signal for any channel forwarded in a pseudowire, an out-of-stream signal message is sent out to the PSN to inform the destination that a signal status change has occurred.

Figure 36: T1 Framing, 56K Data Channel

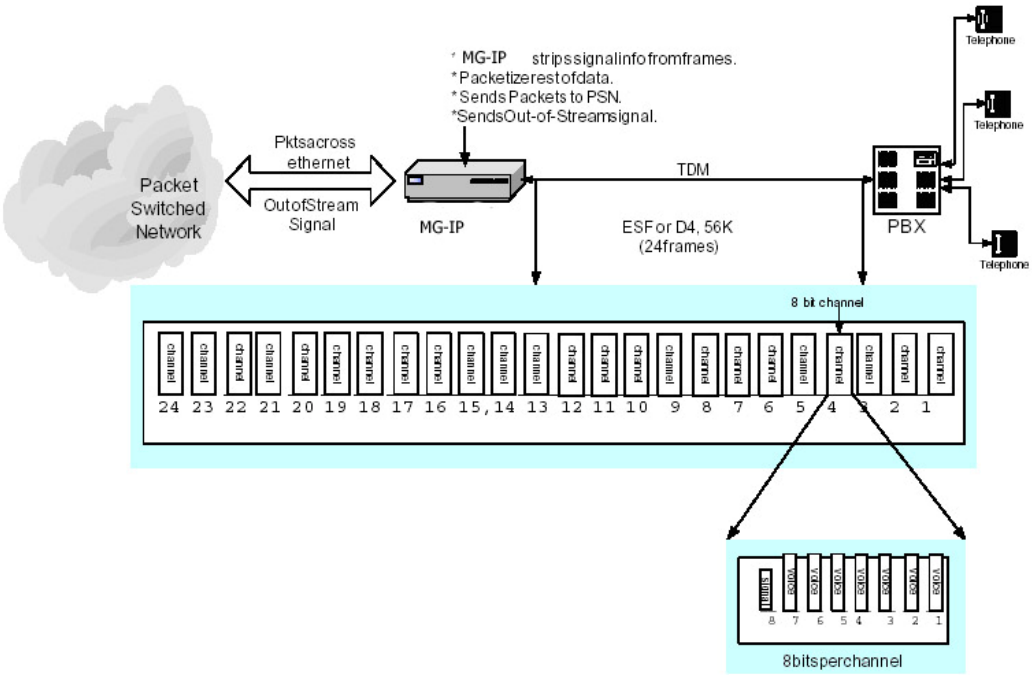

E1 Framing

The E1 data, in pcm30 format, is split into 32 time slots, each being allocated 8 bits in turn. Each time slot sends and receives an 8-bit sample 8000 times per second.

One timeslot (TS0) is reserved for framing purposes, and alternately transmits a fixed pattern. This allows the receiver to lock onto the start of each frame and match up each channel in turn. The standards allow for a full Cyclic Redundancy Check to be performed across all bits transmitted in each frame, to detect if the circuit is losing bits (information).

Another timeslot (TS16) is reserved for signaling purposes, to control call setup and teardown according to one of several standard telecommunications protocols.

Figure 37: E1 pcm30 Format

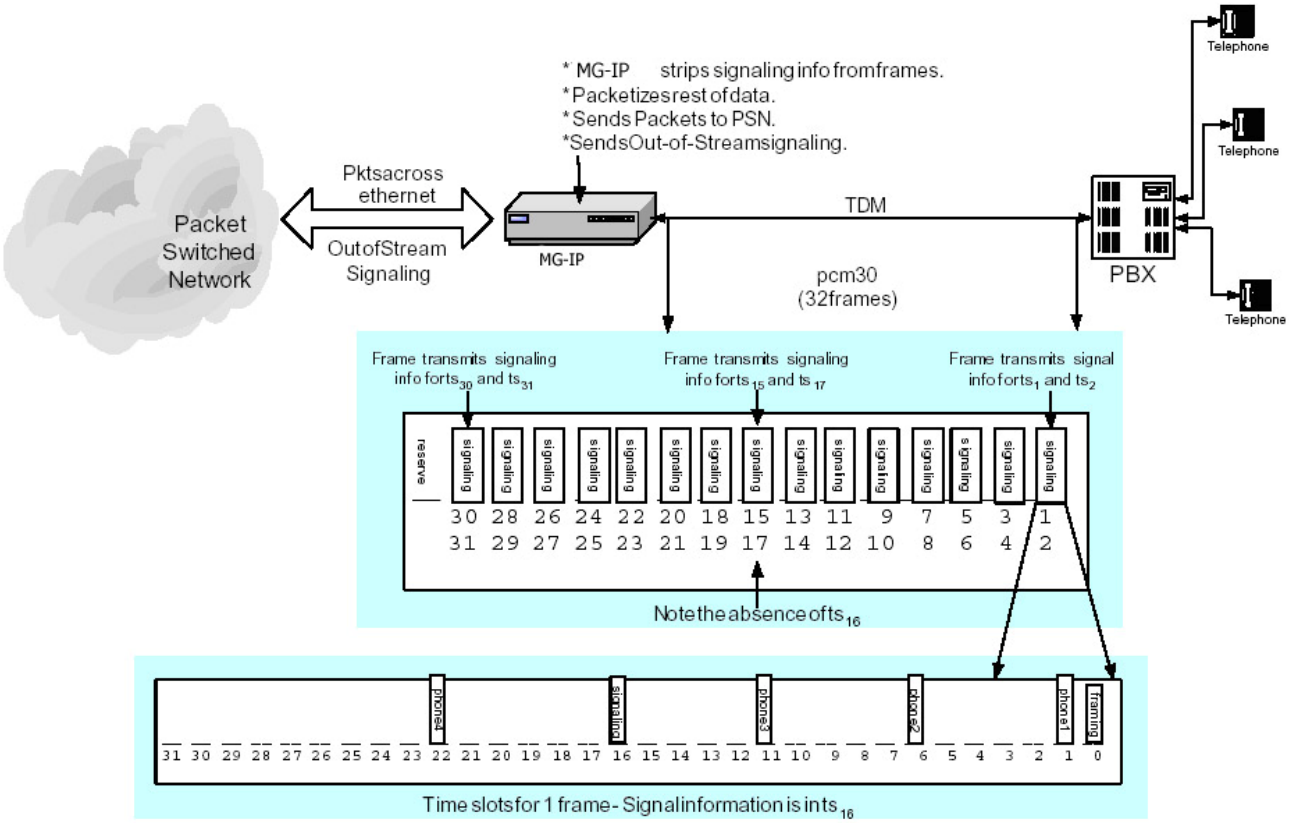

Default Configuration

The MG-IP units' default configuration contains one active session, "Session01" or "s01". The following table contains the default configuration for Session 01:

Table 27: Session01 Default Parameters

Parameter	Value	Task
Session mode	Enabled	A session can be enabled or disabled.
Header type	SAToP	Two headers are available: SAToP/ CESoPSN and CESoETH
Local UDP-port/ECID	2000	the local UDP IP address for this listener
Target UDP-port/ECID	2000	destination UDP IP address
IP TOS	0x0	type of service field: all 0 implies normal service. Shold change to 0x5 to get better priority
Local IP address (when local unit is Master) (This is the default target address on a unit configured as Slave)	169.254.1.100	Olencom definition local IP address
Target IP address (when local unit is Master) (This is the default local address on a unit configured as Slave)	169.254.1.101	Olencom definition target IP address

Parameter	Value	Task
Payload length (bytes/frames)	192/8	length of data stream per CES packet
Jitter maximum level (ms)	5	maximum number of transmission in milliseconds jitter buffer retains
Target MAC	-	mac address when applicable
Layer 2 support mode	VLAN	network layer support
VLAN enable	Disabled	Sets VLAN ID & priority when enabled
MPLS enable	(Disabled)	Sets MPLS header when enabled
Transport emulation type	Unstructured	

Getting Started

Basic management of sessions starts with knowing what sessions exist, how to create new sessions, rename sessions and remove sessions. In unstructured mode the default header type is SAToP, although the CESoETH header also supports unstructured mode. Since the default session header is SAToP, when the port is configured as structured the session header changes to CESoP.

Four main configuration and status commands display the configurable parameters: **ggc**, **gc**, **gs**, and **ls**. Due to the nature of the **gc**, GetConfiguration, and **gs**, GetStatus, commands, both **gc** and **gs** are discussed within the context of structured mode (see page 118) and unstructured mode (see page 116).

Other commands are included at the end of this section because they function the same regardless of the structured/unstructured mode.

Time slot management:

- ssp is used only for unframed ports.
- ssts is used only for framed ports (and only after the port has been configured as such).
- ssts receives only valid timeslots within the following ranges:
- Framed T1 - 1-24
- Framed E1 PCM31 - 1-31
- Framed E1 PCM30 - 1-15, 17-31
- Sessions are not enabled until all configurations on them are done

ggc Command

ggc displays the structured/unstructured status of the port, the current Layer 2 support (VLAN or MPLS) and the total packets per second across all sessions. This command is only available at the TDM_Over_Packet level. The highlighted parameters are configurable and discussed immediately after the parameter table.

```
MG-IP-1:\Config\TDM_Over_Packet>ggc
                                    Running_config   Modified Running_con
Layer 2 support.............:      VLAN             VLAN
Transport emulation type P1:        Unstructured     Unstructured
Total pps of all sessions..:        1000             1000
```

Enabled sessions bw (Kbps).:	2544	2544
Disabled sessions bw (Kbps):	0	0

All port configurations default to unstructured mode. The Layer 2 support defaults to VLAN. The total packets per second reflect the default session, Session01.

Table 28: Global Configuration Parameters

Parameter	CLI	CLI Name	Reference
Layer 2 Support	**slta**	SetLayer2App	page A-106 in Appendix A
Transport emulation type port#	**cet**	SetConfigCESEmulationType	page A-84 in Appendix A

slta Command

Layer 2 support may either be VLAN or MPLS. MPLS is valid only with the CESoETH header while VLAN is valid for all headers. All sessions must be compatible with the Layer 2 setting. If a session is configured for VLAN and this parameter is changed, the service might experience errors. For this parameter to take effect the modified running configuration must replace the running configuration and a restart must occur (\c\rr).

To change the Layer 2 support to MPLS:

MG-IP-1:\Config\TDM_Over_Packet>**slta MPLSwCESoE**

The request was updated successfully in modified running_config.

The configuration change will be activated after the next Replace&Reload (\c\rr)

MG-IP-1:\Config\TDM_Over_Packet>**ggc**

	Running_config	Modified Running_con
Layer 2 support.....:	**VLAN**	**MPLSwCESoE**
Transport emulation type P1.....	Unstructured	Unstructured
Total pps of all sessions.....	1000	1000
Enabled sessions bw (Kbps)	2544	2544
Disabled sessions bw (Kbps)	0	0

At this point the change is only in the modified running configuration and is not active.

To keep the change a replace and reload (rr) must be executed.

To change the Layer 2 support back to VLAN:

MG-IP-1:\Config\TDM_Over_Packet>**slta VLAN**

The request was updated successfully in modified running_config.

The configuration change will be activated after the next Replace&Reload (\c\rr)

cet, spod, spoe Commands

The initial configuration for the single port, Port 1, is unstructured. To change the port from unstructured to structure use cet and the port number or “all” to set all ports to the new setting. The port must be disabled (spod) before changing emulation type. In order for the new configuration to take effect, the port must be enabled (spoe). If the port is already associated with a session, the session must be disabled before using cet.

The cet CLI should be used only if no sessions (if the port is unframed) and no DS0 bundles (if the port is framed) are attached to the port.

Step 1: Disable the port.

MG-IP-1:\Config\TDM_Over_Packet>**spod p1**

The request was updated successfully in modified running_config.

Use \c\rp to save the modified running_config

Port(s) state was changed successfully

Step 2: Configure the port to structured mode.

MG-IP-1:\Config\TDM_Over_Packet>**cet struct p1**

The request was updated successfully in modified running_config.

Use \c\rp to save the modified running_config

Disable and enable the port(s) (spoe/spod or p#\spos) to activate the changes

MG-IP-1:\Config\TDM_Over_Packet>**ggc**

	Running_config	Modified Running_con
Layer 2 support	**VLAN**	**Structured**
Transport emulation type P1	Unstructured	Unstructured
Total pps of all sessions	1000	1000
Enabled sessions bw (Kbps)	2544	2544
Disabled sessions bw (Kbps)	0	0

Step 3: Enable the port.

MG-IP-1:\Config\TDM_Over_Packet>**spoe p1**

The request was updated successfully in modified running_config.

Use \c\rp to save the modified running_config

Port(s) state was changed successfully

MG-IP-1:\Config\TDM_Over_Packet>**ggc**

	Running_config	Modified Running_con
Layer 2 support.....:	**Structured**	**Structured**
Transport emulation type P1.....:	Unstructured	Unstructured
Total pps of all sessions.....:	1000	1000
Enabled sessions bw (Kbps) .....:	2544	2544
Disabled sessions bw (Kbps) .....:	0	0

ls Command

ls lists all the sessions, enabled or disabled, and is available both in the TDM_Over_Packet directory and the TDM_Over_Packet\SCFG directory.

MG-IP-1:\Config\TDM_Over_Packet>**ls**

Session Name	Session Abbr	modified_config	running_config
Session01	s01	Session Enabled	Session running

The MG-IP has a predefined session named Session01. Its abbreviation is “s01”. Anytime the system prompts for a session name or abbreviation, either form suffices: Session01 or s01.

Table 29: List Session Parameters

Parameter	CLI	CLI Name	Reference
Session Name Session Abbr	**adds**	AddNewSession	page A-5 in Appendix A
Session Mode	**sse, ssd**	SetTDMoPSessionEnable, SetTDMoPSessionDisable	page A-127 in Appendix A, page A-126 in Appendix A

On the MG-IP, only a single session can be defined at a time. The following steps can be performed if only if the existing session, Session01, is deleted first using the Remove Session (rms) command.

rms Command

rms is available only from the SCFG directory.

MG-IP-1:\Config\TDM_Over_Packet\Session_config>**rms Session01**

The request was updated successfully in modified running_config.

Use \c\rp to save the modified running_config

The command completed successfully.

adds, ssp, sse Commands

Adding a session to the system comprises creating the session, assigning a port to the session and enabling the session. adds, Add New Session, ssp, Set Session Ports, and sse, Set Session Enable are available both in the TDM_Over_Packet directory and the TDM_Over_Packet\SCFG directory. These steps must be followed before configuring any other parameter associated with the session.

Step 1: Create a new session.

MG-IP-1:\Config\TDM_Over_Packet>**adds Session02 s02**

The request was updated successfully in modified running_config.

Use \c\rp to save the modified running_config

The new session was added successfully.

Step 2: Assign a port to a session.

MG-IP-1:\Config\TDM_Over_Packet>**ssp s02 p1**

The request was updated successfully in modified running_config.

Use \c\rp to save the modified running_config

Activate the modified sessions by disabling (ssd) then enabling them (sse) or perform replace and reload (\c\rr)

Step 3: Enable the session.

MG-IP-1:\Config\TDM_Over_Packet>**sse s02**

The request was updated successfully in modified running_config

Use \c\rp to save the modified running_config

Activate the modified sessions by disabling (ssd) then enabling them (sse) or perform replace and reload (\c\rr)

MG-IP-1:\Config\TDM_Over_Packet>**ls**

Session Name	Session Abbr	modified_config	running_config
Session02	s02	Session Enabled	Session Running

rens Command

rens is available only from the SCFG directory. Rename Session02 to “CESoEth”, “coe”:

MG-IP-1:\Config\TDM_Over_Packet\Session_config>rens

Session02 CESoEth coe

The request was updated successfully in modified running_config.

Use \c\rp to save the modified running_config

The command completed successfully.

MG-IP-1:\Config\TDM_Over_Packet\Session_config>**ls**

Session Name	Session Abbr	modified_config	running_config
CESoEth	Coe	Session Enabled	Session Running

gc Command

gc is available from both the TDM_Over_Packet directory and the TDM_Over_Packet\SCFG directory. This command demands a session number. The parameters highlighted in this list are configurable, whether the mode is structured or unstructured. Each configurable parameter is further discussed below. Type in gc coe. (Or use any other session that can be manipulated without interfering with the system operation.)

MG-IP-1:\Config\TDM_Over_Packet\Session_config>**gc coe**

	Running_config	Modified Running_con
Session mode ..... :	Enabled	Enabled
Header type..... :	SAToP	SAToP
Local UDP-port/ECID..... :	2000	2000
Target UDP-port/ECID..... :	2000	2000
IP TOS ..... :	0x0	0x0
Local IP address ..... :	169.254.1.100	169.254.1.100
Target IP address ..... :	169.254.1.102	169.254.1.102
Payload length (bytes/frames) ..... :	192/8	192/8
Jitter maximum level (ms) ..... :	5	5
Target MAC..... :	-	-
Layer 2 support mode ..... :	VLAN	VLAN
VLAN enable..... :	Disabled	Disabled
MPLS enable ..... :	(Disabled)	(Disabled)
Transport emulation type..... :	Unstructured	Unstructured

Session bandwidth (in Kbps).....: 2032 2032

Table 30: Unstructured Session Parameters

Parameter	CLI	CLI Name	Reference
Target IP address	**ccip**	ConfigSesTargetIP	page A-15 in Appendix A
IP TOS	**ccip**	ConfigSesTargetIP	page A-15 in Appendix A
Payload length	**ccpl**	SetConfigCESPayLength	page A-86 in Appendix A
Jitter Max level	**cclk, clib**	SetConfigCESClock, CalibrateJitter	page A-83 in Appendix A, page A-11 in Appendix A
VLAN enable	**ccvl**	SetConfigCESVLAN	page A-87 in Appendix A
MPLS enable	**scm**	SetConfigMPLS	page A-94 in Appendix A
Add RTP header	**rtp**	PwTDMCfgRtpHdrUsed	page A-68 in Appendix A

ccip Command

Change the target IP to 140.252.13.64, TOS to 0x5. For best performance it is sugessted to set the IP ToS priority to 0x5 or higher.

MG-IP-1:\Config\TDM_Over_Packet\Session_config>ccip coe

140.252.13.64 0x5

The request was updated successfully in modified running_config.

Use \c\rp to save the modified running_config

Activate the modified sessions by disabling (ssd) then enabling them (sse) or perform replace and reload (\c\rr)

ccpl Command

Set the payload for one session or all sessions. The maximum jitter attenuation may be set as an optional parameter using this command.

MG-IP-1:\Config\TDM_Over_Packet\Session_config>**ccpl coe 10**

The request was updated successfully in modified running_config.

Use \c\rp to save the modified running_config

Activate the modified sessions by disabling (ssd) then enabling them (sse) or perform replace and reload (\c\rr)

clib and cclk Commands

Jitter attenuation is set using ccpl (above) where the jitter attenuation is an optional parameter, or using cclk where the jitter parameter is required. clib then calibrates the session.

MG-IP-1:\Config\TDM_Over_Packet\Session_config>**cclk coe 10**

The request was updated successfully in modified running_config.

Use \c\rp to save the modified running_config

Activate the modified sessions by disabling (ssd) then enabling them (sse) or perform replace and reload (\c\rr)

sec Command

sec, Set the emulation Circuit ID (ECID), is only valid with the CESoETH header. While the IDs may be changed at any time, it will only be reflected in the status when the header is CESoETH (change the header back to CESoETH for session coe if it is not already configured). See page 117 for a description of the commands used to change the header type.

MG-IP-1:\Config\TDM_Over_Packet\Session_config>**sec coe 0x2000 0x2001**

The request was updated successfully in modified running_config.

Use \c\rp to save the modified running_config

Activate the modified sessions by disabling (ssd) then enabling them (sse) or perform replace and reload (\c\rr)

MG-IP-1:\Config\TDM_Over_Packet\Session_config>**ssd coe**

MG-IP-1:\Config\TDM_Over_Packet\Session_config>**sse coe**

	Running_config	Modified Running_con
Session mode .....:	Enabled	Enabled
Header type.....:	CESoETH	CESoETH
Local UDP-port/ECID.....:	**0x2000**	**0x2000**
Target UDP-port/ECID.....:	**0x2001**	**0x2001**
IP TOS .....:	0x5	0x5
Local IP address.....:	169.254.1.100	169.254.1.100
Target IP address .....:	-	-
Payload length (bytes/frames) .....:	240/10	240/10
Jitter maximum level (ms) .....:	10	10
Target MAC.....:	99-88-77-66-55-44	99-88-77-66-55-44
Layer 2 support mode .....:	VLAN	VLAN
VLAN enable.....:	Disabled	Disabled
MPLS enable .....:	(Disabled)	(Disabled)
VLAN ID.....:	1	1
VLAN priority .....:	3	3
Transport emulation type.....:	Unstructred	Unstructred
Session bandwidth (in Kbps).....:	1072	1072

ccvl Command

Configure VLAN session parameters to enable or disable the VLAN header, to set the VLAN identification number, and to assign the VLAN priority (if CESoP with CAS, a separate pseudowire may be configured to the OOS session with its own VLAN).

MG-IP-1:\Config\TDM_Over_Packet\Session_config>**ccvl coe enable 1 3**

The request was updated successfully in modified running_config.

Use \c\rp to save the modified running_config

Activate the modified sessions by disabling (ssd) then enabling them (sse) or perform replace and reload (\c\rr)

Note the changes to the configuration. If all is correct, enter ssd all and then sse all to activate the sessions with the new parameters without performing a reset. If all is not correct, use the above commands to change the parameters.

```
MG-IP-1:\Config\TDM_Over_Packet\Session_config>gc coe
                                        Running_config     Modified Running_con
Session mode.................................:  Enabled            Enabled
Header type .................................:  CESoETH           CESoETH
Local UDP-port/ECID.....................:  0x1000             0x1000
Target UDP-port/ECID .................:  0x1000             0x1000
IP TOS.......................................:  -                  -
Local IP address .............................:  169.254.1.100     169.254.1.100
Target IP address.............................:  -                  -
Payload length (bytes/frames) .......:  240/10             240/10
Jitter maximum level (ms) .............:  10                 10
Target MAC ..................................:  99-88-77-66-55-44  99-88-77-66-55-44
Layer 2 support mode......................:  VLAN               VLAN
VLAN enable ................................:  Enabled            Enabled
MPLS enable.................................:  (Disabled)         (Disabled)
VLAN ID .....................................:  1                  1
VLAN priority...............................:  3                  3
Transport emulation type ...............:  Unstructred         Unstructred
Session bandwidth (in Kbps).........:  1078               1078
```

To see the effect of ccip, perform the following:

```
MG-IP-1:\Config\TDM_Over_Packet\Session_config>shsc coe
MG-IP-1:\Config\TDM_Over_Packet\Session_config>ssd coe
MG-IP-1:\Config\TDM_Over_Packet\Session_config>sse coe
                                        Running_config     Modified Running_con
Session mode.................................. :  Enabled            Enabled
Header type..................................... :  SAToP              SAToP
Local UDP-port/ECID..................... :  1000               1000
Target UDP-port/ECID ................... :  1001               1001
IP TOS.......................................... :  0x1f               0x1f
Local IP address ............................. :  169.254.1.100     169.254.1.100
Target IP address ........................... :  140.252.13.64     140.252.13.64
Payload length (bytes/frames) ..... :  240/10             240/10
Jitter maximum level (ms) ........... :  10                 10
Target MAC ..................................... :  -                  -
```

Layer 2 support mode..... :	VLAN	VLAN
VLAN enable ..... :	**Enabled**	**Enabled**
MPLS enable..... :	(Disabled)	(Disabled)
VLAN ID..... :	**1**	**1**
VLAN priority ..... :	**3**	**3**
Transport emulation type ..... :	Unstructred	Unstructred
Session bandwidth (in Kbps)..... :	1958	1958

scm

Enable MPLS mode for a session. Note that the layer two support mode must be MPLS. If it is not, invoking the scm command will not produce the desired effect. See page 107 for a description of the slta command.

MG-IP-1:\Config\TDM_Over_Packet\Session_config>**gc coe**

	Running_config	Modified Running_con
Session mode ..... :	Enabled	Enabled
Header type..... :	CESoETH	CESoETH
Local UDP-port/ECID..... :	**0x2000**	**0x2000**
Target UDP-port/ECID..... :	**0x2000**	**0x2000**
IP TOS ..... :	-	-
Local IP address..... :	169.254.1.100	169.254.1.100
Target IP address ..... :	-	-
Payload length (bytes/frames) ..... :	240/10	240/10
Jitter maximum level (ms) ..... :	10	10
Target MAC..... :	99-88-77-66-55-44	99-88-77-66-55-44
Layer 2 support mode ..... :	VLAN	VLAN
VLAN enable..... :	Enabled	Enabled
MPLS enable ..... :	(Disabled)	(Disabled)
VLAN ID..... :	1	1
VLAN priority ..... :	3	3
Transport emulation type..... :	Unstructred	Unstructred
Session bandwidth (in Kbps)..... :	1728	1728

rtp Command

Add rtp header to the header encapsulation.

MG-IP-4:\Config\TDM_Over_Packet\scfg>RTP s01 True

gs Command

gs is available from the TDM_Over_Packet directory and the TDM_Over_Packet\SCFG director

MG-IP-1:\Config\TDM_Over_Packet>**gs coe**

Session coe Status

Item	Status/Value
Clocking mode ..... :	External-master
Eth to TDM direction ..... :	Down
TDM to Eth direction ..... :	Down
Current jitter buffer delay (ms) . :	-
TDM link status..... :	Down
Valid Eth packets per sec ..... :	Down: 0% of 800 pps
Handled Eth packets..... :	0
Handled TDM packets ..... :	0
Late Eth packets ..... :	0
Underrun Eth packets ..... :	0
Overrun Eth Packets..... :	0
Invalid sequence Eth Packets ..... :	0
Malformed packets counter..... :	0
Packets with L bit counter..... :	0
Packets with R bit counter..... :	0
Lost Eth packets ..... :	a value is displayed only in Recovery mode
Duplicate Eth packets..... :	a value is displayed only in Recovery mode
Jitter maximum level (ms) ..... :	-
Jitter minimum level (ms) ..... :	-
Peer response to ping ..... :	No

spe Command

Set Ping is only valid with the CESoETH header. While the ping status may be changed at any time, it will only be reflected in the status when the header is CESoETH. Change the Ping enable from disabled to enabled:

MG-IP-1:\Config\TDM_Over_Packet\Session_config>**spe coe enable 99-88-77-66-55-44**

The request was updated successfully in modified running_config.

Use \c\rp to save the modified running_config

Activate the modified sessions by disabling (ssd) then enabling them (sse) or perform replace and reload (\c\rr)

MG-IP-1:\Config\TDM_Over_Packet\Session_config>**ssd coe**

MG-IP-1:\Config\TDM_Over_Packet\Session_config>**sse coe**

To see the ping state run gs coe. The last two lines of the status display ping.

Peer response to ping.....: Yes

Peer next hop MAC address.....: 99-88-77-66-55-44

Session Management Tasks in Unstructured Mode

The following CLI commands are found in the \Config\ToP and \Config\ToP\SCFG directories for session management. Presented in this section is a simple walk-through of the available tools. Section Session Management Tasks in Structured Mode on page 118 presents an example usage of these tools:

Table 31: Unstructured Mode Session Management Commands

Action	Command
Display configuration information	gc (see page A-26 in Appendix A)
Configure the session header	shsc (see page A-14 in Appendix A) shce (see page A-13 in Appendix A)
Display the time slots associated with a session	gsts (see page A-47 in Appendix A)

gc Command

gc is available from both the TDM_Over_Packet directory and the TDM_Over_Packet\SCFG directory. This command requires a session identifier. The parameters highlighted in this list are configurable. Each configurable parameter is further discussed below. Type in gc coe. (Or use any other session that can be manipulated without interfering with the system operation.)

```
MG-IP-1:\Config\TDM_Over_Packet\Session_config>gc coe
                                        Running_config   Modified Running_con
Session mode..................................... :   Enabled          Enabled
Header type...................................... :   SAToP            SAToP
Local UDP-port/ECID.................... :   2000           2000
Target UDP-port/ECID................. :   2000           2000
IP TOS........................................... :   0x5              0x5
Local IP address ............................... :   169.254.1.100    169.254.1.100
Target IP address............................... :   -                -
Payload length (bytes/frames) ........ :   192/8            192/8
Jitter maximum level (ms) ............. :   5                5
Target MAC ..................................... :
Layer 2 support mode..................... :   VLAN             VLAN
VLAN enable ..................................... :   Disabled         Disabled
MPLS enable ..................................... :   (Disabled)       (Disabled)
Transport emulation type................ :   Unstructred      Unstructred
Session bandwidth (in Kbps)........... :   2032               2032
```

Table 32: Unstructured Session Parameters

Parameter	CLI	CLI Name	Reference

Header	**shsc, shce**	ConfigHeaderSAT/CESoP, ConfigHeaderCESoETH	page A-14 in Appendix A, page A-13 in Appendix A
Local & Target UDP-port	**Shsc**	ConfigHeaderSAT/CESoP	page A-14 in Appendix A
IP address/TOS	**ccip**	ConfigSesTargetIP	page A-15 in Appendix A
Payload length	**ccpl**	SetConfigCESPayLength	page A-86 in Appendix A
Jitter Max level cclk	**cclk, clib**	SetConfigCESClock, CalibrateJitter	page A-83 in Appendix A, page A-11 in Appendix A
VLAN enable	**ccvl**	SetConfigCESVlan	page A-87 in Appendix A
MPLS enable	**scm**	SetConfigMPLS	page A-94 in Appendix A

shce and shsc Commands

The session header default in unstructured mode is SAToP. Change the header type to CESoETH:

MG-IP-1:\Config\TDM_Over_Packet\Session_config>**shce coe 99- 88-77-66-55-44 0x1000 0x1001**

The request was updated successfully in modified running_config.

Use \c\rp to save the modified running_config

Activate the modified sessions by disabling (ssd) then enabling them (sse) or perform replace and reload (\c\rr)

MG-IP-1:\Config\TDM_Over_Packet\Session_config>**ssd coe**

The command completed successfully.

MG-IP-1:\Config\TDM_Over_Packet\Session_config>**sse coe**

The command completed successfully.

MG-IP-1:\Config\TDM_Over_Packet\Session_config>**gc coe**

	Running_config	Modified Running_con
Session mode ..... :	Enabled	Enabled
Header type ..... :	CESoETH	CESoETH
Local UDP-port/ECID ..... :	**0x1000**	**0x1000**
Target UDP-port/ECID ..... :	0x1001	0x1001
IP TOS ..... :	-	-
Local IP address ..... :	169.254.1.100	169.254.1.100
Target IP address..... :	-	-
Payload length (bytes/frames) ..... :	192/8	192/8
Jitter maximum level (ms) ..... :	5	5
Target MAC ..... :	9-88-77-66-55-44	9-88-77-66-55-44
Layer 2 support mode ..... :	VLAN	VLAN
VLAN enable ..... :	Disabled	Disabled
MPLS enable..... :	(Disabled)	(Disabled)
Transport emulation type ..... :	Unstructred	Unstructred

```
Session bandwidth (in Kbps) ..........:   2032                2032
```

gsts

Display timeslots associated with the session. This command displays all time slots from an individual port as associated with the assigned session. This command is useful when in structured mode.

Session Management Tasks in Structured Mode

A structured mode session adds configuration based on the format of the incoming data stream: framing information, whether or not out-of-stream signaling is enabled, and the allocation of time slots to different destinations.

The following CLI commands are found in the \Config\ToP and \Config\ToP\SCFG directories for session management. Presented in this section is a simple walk-through of the available tools.

Table 33: Structured Mode Session Management Commands

Action	Command
Display configuration information	**gc** (see page A-26 in Appendix A)
Display the time slots associated with a session	**gsts** (see page A-47 in Appendix A)
Add/ remove/ set session timeslots	**ssts** (see page A-121 in Appendix A)
Configure the session header	**shce** (see page A-13 in Appendix A) **shsc** (see page A-14 in Appendix A)

gc Command

```
MG-IP-1:\Config\TDM_Over_Packet\Session_config>gc coe
                                        Running_config   Modified Running_con
Session mode ..................................:  Enabled          Enabled
Header type....................................:  SAToP            SAToP
Local UDP-port/ECID ...................:  2000             2000
Target UDP-port/ECID...................:  2000             2000
Local OOS UDP-port/ECID ...........:  (2000)           (2000)
Target OOS UDP-port/ECID...........:  (2000)           (2000)
IP TOS ........................................:  0x5              0x5
Local IP address...............................:  169.254.1.100    169.254.1.100
Target IP address .............................:  169.254.1.100    169.254.1.100
Payload length (bytes/frames)  ........:  192/8            192/8
Jitter maximum level (ms) .............:  5                5
Target MAC.....................................:  -                -
Layer 2 support mode ......................:  VLAN             VLAN
VLAN enable....................................:  Disabled         Disabled
MPLS enable ...................................:  (Disabled)       (Disabled)
```

Transport emulation type..... :	Unstructred	Unstructred
Session bandwidth (in Kbps)..... :	2032	2032

Table 34: Structured Session Parameters

Parameter	CLI	CLI Name	Reference
Header	shsc, shce	ConfigHeaderSAT/CESoP, ConfigHeaderCESoETH	page A-14 in Appendix A, page A-13 in Appendix A
Local & Target UDP-port/ ECID	shsc, shce	ConfigHeaderSAT/CESoP, ConfigHeaderCESoETH	page A-14 in Appendix A, page A-13 in Appendix A
Local & Target OOS ECID	shce	ConfigHeaderCESoETH	page A-13 in Appendix A

shsc and shce Commands

The session header default in structured mode is CESoPSN. Included in this definition are the local and target out-of-stream (OOS) UDP/ECID ports. Change the header type to CESoETH:

MG-IP-1:\Config\TDM_Over_Packet\Session_config>**shce coe 99- 88-77-66-55-44 0x1000 0x1001 0x2000 0x2001**

The request was updated successfully in modified running_config.

Use \c\rp to save the modified running_config

Activate the modified sessions by disabling (ssd) then enabling them (sse) or perform replace and reload (\c\rr)

MG-IP-1:\Config\TDM_Over_Packet\Session_config>**ssd coe**

The command completed successfully.

MG-IP-1:\Config\TDM_Over_Packet\Session_config>**sse coe**

The command completed successfully

MG-IP-1:\Config\TDM_Over_Packet\Session_config>**gc coe**

	Running_config	Modified Running_con
Session mode .....:	Enabled	Enabled
Header type.....:	CESoETH	CESoETH
Local UDP-port/ECID .....:	0x1000	0x1000
Target UDP-port/ECID.....:	0x1000	0x1000
Local OOS UDP-port/ECID .....:	(0x2000)	(0x2000)
Target OOS UDP-port/ECID.....:	(0x2001)	(0x2001)
IP TOS .....:	-	-
Local IP address.....:	169.254.1.100	169.254.1.100
Target IP address .....:	169.254.1.100	169.254.1.100
Payload length (bytes/frames) .....:	192/8	192/8
Jitter maximum level (ms) .....:	5	5
Target MAC.....:	99-88-77-66-55-44	99-88-77-66-55-44

Layer 2 support mode .....:	VLAN	VLAN
VLAN enable.....:	Disabled	Disabled
MPLS enable .....:	(Disabled)	(Disabled)
Transport emulation type .....:	Unstructred	Unstructred
Session bandwidth (in Kbps) .....:	1744	1744

gtsm GetTimeSlotMap

Valid only from the \Config\TDM_Over_Packet directory. Get the time slot allocation according to the port. The top two lines on the right hand side (00---0---1---etc. and 01- --5--0---etc.) are to be read as columns. The left most position is 00, then 01... all the way to 24. Since this is a T1 configuration, only 24 time slots are available. In E1 format this display has 32 time slots.

Read from left to right the port number and the associated time slots. The “XXX..XX” in the right hand column refer to the assigned time slots. In this example ports 1 and 2 have all their time slots assigned. Ports 3 and 4 have no time slot assignments.

This display shows both the running configuration and the modified configuration.

```
MG-IP-1:\Config\TDM_Over_Packet>gtsm all

Running configuration
TimeSlot#                          00---0----1----1----2---2
                                   01---5----0----5----0---4
Port 1                             fXXXXXXXXXXXXXXXXXXXXXXXX

Modified configuration
TimeSlot#                          00---0----1----1----2---2
                                   01---5----0----5----0---4
Port 1                             fXXXXXXXXXXXXXXXXXXXXXXXX
```

gsts GetSessionTimeSlots

Valid from both the \Config\TDM_Over_Packet and the scfg directories. This CLI command displays the assigned port(s) time slot configuration for one session. As above, the “XXX...XXX” indicates the allocation of a time slot and the “---” indicates no allocation.Get the time slot allocation according to the session.

```
MG-IP-1:\Config\TDM_Over_Packet>gsts coe

Running Configuration of coe session
TimeSlot#                          00---0----1----1----2---2
                                   01---5----0----5----0---4
Port 1                             fXXXXXXXXXXXXXXXXXXXXXXXX
```

Modified configuration

TimeSlot#	00---0----1----1----2---2
	01---5----0----5----0---4
Port 1	fXXXXXXXXXXXXXXXXXXXXXXXX

ssts SetSessionTimeSLots

This command is valid in both the TDM_Over_Packet directory and the scfg directory. ssts completely wipes out any previous configuration of timeslots for this session. The session must be disabled before assigning timeslots to it.

MG-IP-1:\Config\TDM_Over_Packet>**ssts s01 p1 1 3 4 7-10**

MG-IP-1:\Config\TDM_Over_Packet>**ssts s01 p1 20-24**

MG-IP-1:\Config\TDM_Over_Packet>**ssts s01 none**

Structured Mode Example 1 – CESoPSN

In this example, master and slave MG-IP units operate in E1, structured mode, CESoPSN.

Master:

Step 1: Restart the system with the default database and after reboot, set default settings.

MG-IP-1:\Admin>**sddb e1 loopback**

MG-IP-1 R03.01.01_D001-202

After the reboot:

MG-IP-1:\Config\WAN\sce 100 full

MG-IP-1:\d\d\scep wan off

MG-IP-1:\d\d\scep lan on 5

MG-IP-1:\Config\rp

Step 2: Disable session s01, disable port 1, remove the port assigned to session, set port 1 to structured mode and transition to the port 1 directory.

MG-IP-1:\Config\TDM_Over_Packet>**ssd s01**

MG-IP-1:\Config\TDM_Over_Packet>**spod p1**

MG-IP-1:\Config\TDM_Over_Packet>**ssp s01 none**

MG-IP-1:\Config\TDM_Over_Packet>**cet struct p1**

MG-IP-1:\Config\TDM_Over_Packet>**..\e1\p1**

Step 3: Configure frame format to pcm30. Disable and re-enable the port.

MG-IP-1:\Config\E1\Port_1>**sfp PCM30**

MG-IP-1:\Config\TDM_Over_Packet>**spoe p1**

Step 4: Replace the time slot definition with a new time slot definition. Session 1 gets time slots 1 through 4 from port 1.

MG-IP-1:\Config\TDM_Over_Packet>**ssts s01 p1 1-4**

Step 5: Configure the payload length to 8 frames and jitter attenuation to 20ms using the "all" parameter. Similarly, disable and re-enable the session.

MG-IP-1:\Config\TDM_Over_Packet>**ccpl all 8 20**

MG-IP-1:\Config\TDM_Over_Packet>**sse all**

Step 6: Replace the start up configuration with the modified running configuration:

MG-IP-1:\Config>**rp**

The command completed successfully.

Slave (169.254.1.101)

Step 1: Configure the slave with clock recovery to recover from the master.

MG-IP-1:\Admin>**sddb e1 recovery**

After the reboot:

MG-IP-1:\Config\WAN\sce 100 full

MG-IP-1:\d\d\scep wan off

MG-IP-1:\d\d\scep lan on 5

MG-IP-1:\Config\rp

Step 2: Disable session s01, disable port 1, remove the port assigned to session, set port 1 to structured mode and transition to the port 1 directory.

MG-IP-1:\Config\TDM_Over_Packet>**ssd s01**

MG-IP-1:\Config\TDM_Over_Packet>**spod p1**

MG-IP-1:\Config\TDM_Over_Packet>**ssp s01 none**

MG-IP-1:\Config\TDM_Over_Packet>**cet struct p1**

MG-IP-1:\Config\TDM_Over_Packet>**..\e1\p1**

Step 3: Configure frame format to pcm30 to match the master. Disable and then reenable port 1.

MG-IP-1:\Config\E1\Port_1>**sfp PCM30**

MG-IP-1:\Config\TDM_Over_Packet>**spoe p1**

Step 4: Replace the time slot definition with a new time slot definition. Session 1 gets time slots 1 through 4 from port 1.

MG-IP-1:\Config\TDM_Over_Packet>**ssts s01 p1 1-4**

Step 5: Configure the payload length to 8 frames and jitter attenuation to 20ms for session s01. Disable and re-enable session s01.

MG-IP-1:\Config\TDM_Over_Packet>**ccpl s01 8 20**

MG-IP-1:\Config\TDM_Over_Packet>**sse s01**

Step 6: Replace the start up configuration with the modified running configuration:

MG-IP-1:\Config>**rp**

The command completed successfully.

Structured Mode Example 2 – MEF-8 (CESoEth)

In this example, master and slave MG-IP units operate in E1, structured mode, CESoEth.

Master:

Step 1: Restart the system with the default database.

MG-IP-1:\Admin>**sddb e1 loopback**

MG-IP-1 R03.01.01_D001-202

After the reboot:

MG-IP-1:\Config\WAN\sce 100 full

MG-IP-1:\d\d\scep wan off

MG-IP-1:\d\d\scep lan on 5

MG-IP-1:\Config\rp

Step 2: Disable session s01, disable port 1, remove the port assigned to session, set port 1 to structured mode and transition to the port 1directory.

MG-IP-1:\Config\TDM_Over_Packet>**ssd s01**

MG-IP-1:\Config\TDM_Over_Packet>**spod s01**

MG-IP-1:\Config\TDM_Over_Packet>**ssp s01 none**

MG-IP-1:\Config\TDM_Over_Packet>**cet struct p1**

MG-IP-1:\Config\TDM_Over_Packet>**..\e1\p1**

Step 3: Configure frame format to pcm30 and enable port 1.

MG-IP-1:\Config\E1\Port_1>**sfp PCM30**

MG-IP-1:\Config\TDM_Over_Packet>**spoe p1**

Step 4: Replace the time slot definition with a new time slot definition. Session 1 gets time slots 1 through 4 from port 1.

MG-IP-1:\Config\TDM_Over_Packet>**ssts s01 p1 1-4**

Step 5: Configure session s01 for CESoETH slave MAC.

MG-IP-1:\Config\TDM_Over_Packet\Session_config>**shce s01 99-88-77-66-55-44**

Step 6: Configure the payload length to 8 frames and jitter attenuation to 20ms.

MG-IP-1:\Config\TDM_Over_Packet>**ccpl all 8 20**

MG-IP-1:\Config\TDM_Over_Packet>**sse all**

Step 7: Replace the start up configuration with the modified running configuration.

MG-IP-1:\Config>**rp**

The command completed successfully.

Slave (169.254.1.101):

Step 1: Configure the second slave to clock recovery from the master.

MG-IP-1:\Admin>**sddb e1 recovery**

MG-IP-1 R03.01.01_D001-202

After the reboot:

MG-IP-1:\Config\WAN\sce 100 full

MG-IP-1:\d\d\scep wan off

MG-IP-1:\d\d\scep lan on 5

MG-IP-1:\Config\rp

Step 2: Disable session s01, disable port 1, remove the port assigned to session, set port 1 to structured mode and transition to the port 1 directory.

MG-IP-1:\Config\TDM_Over_Packet>**ssd s01**

MG-IP-1:\Config\TDM_Over_Packet>**spod s01**

MG-IP-1:\Config\TDM_Over_Packet>**ssp s01 none**

MG-IP-1:\Config\TDM_Over_Packet>**cet struct p1**

MG-IP-1:\Config\TDM_Over_Packet>**..\e1\p1**

Step 3: Configure frame format to pcm30 and enable port 1.

MG-IP-1:\Config\E1\Port_1>**sfp PCM30**

MG-IP-1:\Config\TDM_Over_Packet>**spoe p1**

Step 4: Configure session 1 to CESoETH master MAC.

MG-IP-1:\Config\TDM_Over_Packet\Session_config>**shce s01 19-18-17-16-15-14**

Step 5: Replace the time slot definition with a new time slot definition. Session 1 gets time slots 1 through 4 from port 1.

MG-IP-1:\Config\TDM_Over_Packet>**ssts s01 p1 1-4**

Step 6: Configure the payload length to 8 frames and jitter attenuation to 20ms for all sessions.

MG-IP-1:\Config\TDM_Over_Packet>**ccpl s01 8 20**

MG-IP-1:\Config\TDM_Over_Packet>**sse s01**

Step 7: Replace the start up configuration with the modified running configuration.

MG-IP-1:\Config>**rp**

The command completed successfully.

Managing SNMP

MG-IP units include the ability to send basic status information over the network using SNMP Traps. This section describes the tasks involved in managing the SNMP settings.

SNMP Management Tasks

The following tasks may be necessary to manage your SNMP settings on the MG-IP. These commands are found in the \Config\SNMP directory, unless otherwise noted.

Table 35: SNMP Management

Action	Command
Add/display/remove SNMP request managers	arm (see page A-6 in Appendix A) grm (see page A-44 in Appendix A) rrm (see page A-70 in Appendix A)
Add/display/remove Trap managers	atm (see page A-7 in Appendix A) gtm (see page A-63 in Appendix A) rtm (see page A-73 in Appendix A)
Display global SNMP request port and Trap port	gp (see page A-45 in Appendix A)
Configure global SNMP request port and Trap port	srp (see page A-117 in Appendix A) stp (see page A-128 in Appendix A)
Display SNMP system description	gsd (see page A-61 in Appendix A)
Display SNMP statistics	gst (see page A-52 in Appendix A)

gp

Display the SNMP request and trap ports.

```
MG-IP-1:\Config\SNMP>gp
                          Running_config   Modified Running_con
Request port............:  161              161
Trap port...............:  162              162
```

gsd Command

gsd displays the current configuration of the SNMP system. The first two parameters, the request port and the trap port are set using the srp and stp commands. The SNMP system description is the version of firmware currently running in the module.

```
MG-IP-1:\Config\SNMP>gsd
        Running_config
Request port :                  161
Trap port :                     161
SNMP system description :       MG-IP-1 R03.01.01_D001-202
SNMP system contact :
SNMP system name :
SNMP system location :
  Modified Running_config
Request port :
SNMP system description :       161
SNMP system description :       161
SNMP system name :
SNMP system location :
```

srp

Configure the SNMP request port.

MG-IP-1:\Config\SNMP>**srp 163**

The request was updated successfully in modified running_config.

The configuration change will be activated after the next Replace&Reload (\c\rr

stp

Configure the trap port.

MG-IP-1:\Config\SNMP>**stp 164**

The request was updated successfully in modified running_config.

The configuration change will be activated after the next Replace&Reload (\c\rr)

```
MG-IP-1:\Config\SNMP>gp
                        Running_config   Modified Running_con
Request port.........:  161              163
Trap port ...........:  162              164
```

gst Command

Display the MIB2 statistics of the system.

MG-IP-1:\Config\SNMP>**gst m**

```
Total in packets..................................... :    0
Total out packets.................................... :    2
Total in bad version packets ........................ :    0
Total in bad community name packets ......... :    0
Total in bad user name packets...................... :    0
Total in parse error packets ........................ :    0
Total in pdu too big ................................ :    0
Total in packets no such name..................... :    0
Total in bad error status ............................ :    0
Total in read only error status..................... :    0
Total in general error status ....................... :    0
Total in get request packets ........................ :    0
Total in set request packets........................ :    0
Total in accepted get request ....................... :    0
Total in accepted get next request ................ :    0
Total in accepted set request..................... :    0
Total in accepted get response..................... :    0
Total in trap packets ............................... :    0
Total out error status:too big ...................... :    0
Total out error status:no such name............... :    0
Total out error status:bad value ................... :    0
Total out error status:bad gen ..................... :    0
Total out get request packets ...................... :    0
Total out get request next packets ................ :    0
Total out set request packets..................... :    0
Total out get response packets..................... :    0
Total enable authen trap packets................... :    2
Total enable authen trap packets................... :    1
Total silent drops ................................... :    0
Total proxy drops ................................... :    0
```

Request Managers

grm Command

Get the current configuration of request managers.

```
MG-IP-1:\Config\SNMP>grm
Mngr ID   Mngr Community Name      IP addr        Permission
1         public                   169.254.1.200  Get
```

arm Command

Add a request manager to the configuration.

MG-IP-1:\Config\SNMP>**arm Testcom01 148.254.1.100**

The command completed successfully.

The request was updated successfully in modified running_config.

Use \c\rp to save the modified running_config

rrm Command

Before running rrm, add another request manager to the system.

MG-IP-1:\Config\SNMP>**grm**

Mngr ID	Mngr Community Name	IP addr	Permission
1	public	169.254.1.200	get
2	Testcom01	148.254.1.100	get
3	test02	169.254.1.100	get

Now remove test02, manager ID #3:

MG-IP-1:\Config\SNMP>**rrm 3**

The command completed successfully.

The request was updated successfully in modified running_config.

Use \c\rp to save the modified running_config

Trap Managers

gtm Command

Get the current trap managers. Note that the system default is “Trp Dflt name”.

MG-IP-1:\Config\SNMP>**gtm**

Mngr ID	Mngr Community Name	IP addr
1	public	169.254.1.200

atm Command

Add a new trap manager. Then add another.

MG-IP-1:\Config\SNMP>**atm tt01 169.254.1.102**

MG-IP-1:\Config\SNMP>**atm tt02 169.254.1.103**

The command completed successfully.

MG-IP-1:\Config\SNMP>**gtm**

Mngr ID	Mngr Community Name	IP addr

1	public	169.254.1.200
2	tto1	169.254.1.102
3	tt02	169.254.1.103

rtm Command

Remove a trap manager by ID number.

MG-IP-1:\Config\SNMP>**rtm 3**

The command completed successfully.

The request was updated successfully in modified running_config.

Use \c\rp to save the modified running_config

4 SNMP Support

The Simple Network Management Protocol, SNMP, is an application layer, open network management standard for networks based on the Transmission Control Protocol/Internet Protocol (TCP/IP) protocol suite. SNMP enables network administrators to manage performance of the network, monitor and correct network problems and plan for network growth. It provides a standard system for classifying system information about hardware, software and other aspects of a distributed client/server system. SNMP network and systems management is based on the manager/agent model described in the network management standards defined by the International Organization for Standardization (ISO) and presented in a condensed version in the Management Model section below.

The Management Model

A network management system (NMS) contains several nodes, each with a processing entity, termed an agent, which has access to management instrumentation. It has at least one management station and it has a management protocol, used to convey management information between the agents and management stations. Operations of the protocol are carried out under an administrative framework which defines both authentication and authorization policies.

Network management stations execute management applications which monitor and control network elements. Network elements are devices such as hosts, routers, terminal servers, etc., which are monitored and controlled through access to their management information.

Management information is viewed as a collection of managed objects, residing in a virtual information store, termed the Management Information Base (MIB). Collections of related objects are defined in MIB modules. (Refer to RFC 1444).

Figure 38: Network Management Model

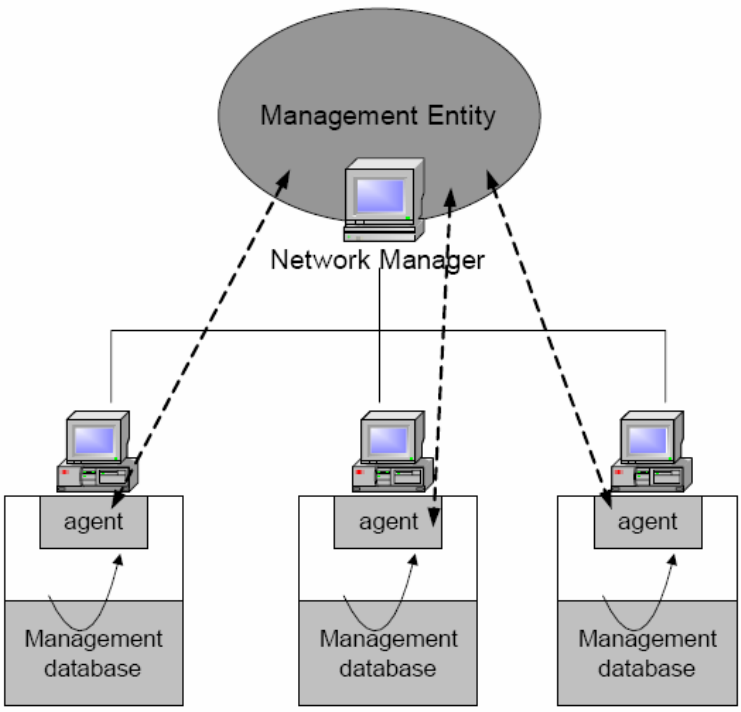

NMS	(network management system) monitors and controls managed devices. NMS units provide the bulk of the processing and memory resources for network management. One or more NMS must exist on any managed network.
managed device	(network element) is a network node containing an agent and resides on the managed network. Managed devices collect and store management information and make the information available to the NMS. Managed devices, or network elements, can be routers, access servers, switches, bridges, hubs, computer hosts, printers, or devices such as Olencom MG-IP units.
agents	network management software modules residing in a managed device. An agent has local knowledge of management information and translates that information into a form compatible with the management model.

A device using SNMP version 2 (SNMPv2) as the network management model, acts as a managed device (a network element) within a network managed by one or more network management systems.

The NMS captures information about the managed device via the SNMP agent and reads information stored in the management information base. There are four defined operations:

set:	used by an NMS to control managed devices. The NMS sets variables that control the configuration of the managed device.
get:	used by an NMS to monitor managed devices. The NMS examines different variables that are maintained by the managed device.
trap	used by managed devices to asynchronously report events to the NMS. When certain types of events occur, a managed device sends a trap to the NMS.
next	operations used by an NMS to determine which variables a managed device supports and to sequentially gather information in variable tables.

SNMP Management Information Base (MIB)

A Management Information Base (MIB) is a collection of information organized hierarchically. MIBs are accessed using a network management protocol such as SNMP. MIBs are comprised of managed objects and are identified by object identifiers.

A MIB can be depicted as an abstract tree with an unnamed root. Individual data items make up the leaves of the tree. Object identifiers (OIDs) uniquely identify or name MIB objects in the tree. OIDs are organized hierarchically with specific digits assigned by different organizations.

The object ID structure of an SNMP MIB defines three main branches: Consultative Committee for International Telegraph and Telephone (CCITT), International Organization for Standardization (ISO), and joint ISO/CCITT. Much of the current MIB activity occurs in the portion of the ISO branch defined by object identifier 1.3.6.1 and dedicated to the Internet community.

The current Internet-standard MIB, MIB-II, is defined in RFC 1213 and contains objects grouped by protocol (including TCP, IP, User Datagram Protocol [UDP], SNMP, and others) and other categories, including “system” and “interfaces.”

The MIB tree is extensible by virtue of experimental and private branches. Vendors can define their own private branches to include instances of their own products.

MG-IP SNMP Support

This chapter describes the SNMP support provided in Olencoms' MG-IP units. SNMP support is currently partial, and a complete implementation will gradually be provided in the future.

Please refer to the following notes on Olencom's SNMP implementation:

- SNMP represents the running configuration, regardless of the method by which it was configured (SNMP/CLI/RCP)
- All IETF pseudowire-related MIBs are still in draft status. It is assumed that the major requirements are already defined, but minor changes may occur
- A number of Olencom pseudowire parameters are not supported in the draft MIBs, nor will they be supported in the future. These parameters are defined in extended private tables
- Private MIBs will be placed under the Olencom branch, assigned by IANA - 24222
- The SNMP agent supports Get, GetNext, GetBulk and Set functionality
- The SNMP agent supports Traps

MIB Support

This section describes the MIBs supported by category - standard MIBs, draft MIBs (i.e. pseudowire MIBs) and Olencom private MIBs. MIBs are arranged as described in Private MIB - General Definitions on page 141, with the relations between the various MIBs described in MIB Relations on page 141. MIB behavior is described in the actual MIB files. For information on irregular behavior, please refer to Irregular Functionality on page 138.

The following sections describe a subset of the defined MIBs that is relevant to the current version. Each parameter lists the required access rights, with the symbol "G" representing "Get", and the symbol "GS" representing "Get + Set". Supported enumerations will be listed if they are a subset of the ones listed in the MIBs.

Standard MIBs

Standard MIBs are arranged within SNMP as required by the IETF.

RFC-1213

Partial support for Get/Trap operations on the following groups:

- System group
- Interfaces
- IP (excluding ipRouteTable)
- ICMP
- TCP
- UDP
- SNMP

DS1-MIB (RFC-3895)

Support is currently not fully compliant.

- dsx1ConfigTable
- dsx1LineIndex – G
- dsx1LineType – GS
  - dsx1ESF
  - dsx1D4
  - dsx1E1
  - dsx1E1MF
  - dsx1Unframed
  - dsx1E1Unframed
- dsx1LineCoding – GS
  - dsx1B8ZS
  - dsx1HDB3
  - dsx1AMI
- dsx1LoopbackConfig – GS
- dsx1LineStatus – G
  - dsx1NoAlarm
  - dsx1RcvAIS
  - dsx1LossOfSignal
  - dsx1LossOfFrame
  - dsx1RcvFarEndLOF
  - dsx1RcvFarEndLOMF
- dsx1SignalMode – GS
  - none
  - robbedBit
  - bitOriented
- dsx1TransmitClockSource – G
- dsx1LoopbackStatus – G
  - dsx1NoLoopback
  - dsx1NearEndInwardLoopback
  - dsx1NearEndLineLoopback
  - dsx1NearEndInwardLoopback
  - dsx1NearEndOtherLoopback
- dsx1LineStatusLastChange – G
- dsx1Channelization – GS
  - disabled
  - enabledDs0
- dsx1LineMode – GSS
- dsx1LineStatusChangeTrapEnable – GS

- dsx1LineBuildOut – GS

The MG-IP-1 and MG-IP-4 support the following performance tables:

- dsx1CurrentTable
- dsx1IntervalTable
- dsx1TotalTable

Each table contains counts of the following parameters:

- Error seconds (ES)
- Severely errored seconds (SES)
- Severely errored framing seconds (SEFS)
- Unavailable seconds (UAS)
- Controlled slip seconds (CSS)
- Path code violations (PCV)
- Line errored seconds (LES)
- Bursty errored seconds (BES)
- Line code violations (LCV)

The Current Table (dsx1CurrentTable) presents values accumulated in the last 15 minutes or less. The 96 Interval Table (dsx1IntervalTable) contains accumulated data from 15 minute intervals over the last 24 hours. The Total Table (dsx1TotalTable) is the sum of the Interval Tables.

dsx1LineStatusChange notification is supported - see **Ошибка! Источник ссылки не найден.** on page **Ошибка! Закладка не определена.**.

DS0-BUNDLE-MIB (RFC-2494)

Support is fully compliant.

- dsx0BundleNextIndex – G
- dsx0BundleTable
- dsx0BundleIndex – G
- dsx0BundleIfIndex – G
- dsx0BundleCircuitIdentifier – G
- dsx0BundleRowStatus – GS
  - createAndGo
  - destroy

Draft MIBs

Draft MIBs still lack a defined location in the standard SMI tree and are currently placed under the olencomExp branch in the private Olencom branch.

Note that parameter names in the list are draft names. Actual names in the MIB feature a “Olencom” prefix.

PW-STD-MIB (Draft-ietf-pwe3-pw-mib-06)

Support is currently not fully compliant.

- OlencomPwIndexNext – G
- OlencomPwTable
- OlencomPwType – G (determined by type of DS1 port assigned to the pseudowire)
  - other
  - e1Satop
  - t1Satop
  - basicCesPsn
  - tdmCasCesPsn
- OlencomPwPsnType – G
  - ip
- OlencomPwPeerAddrType – G
  - ipv4
- OlencomPwPeerAddr - GS
- OlencomPwOutboundLabel – GS
  - Used for UDP destination port
- OlencomPwInboundLabel – GS
  - Used for UDP source port
- OlencomPwName – GS
- OlencomPwAdminStatus – GS
- OlencomPwOperStatus – G
  - up
  - down
- OlencomPwLocalStatus – G
  - 0
  - customerFacingPwRxFault
- OlencomPwRowStatus – GS
  - active
  - createAndGo
  - destroy

PW-STD-TDM-MIB (Draft-ietf-pwe3-tdm-mib-04)

Support is currently not fully compliant.

- OlencomPwTDMTable
- OlencomPwTDMIfIndex – GS
- OlencomPwGenTDMCfgIndex – G
- OlencomPwTDMCfgTable
- OlencomPwTDMCfgIndex – G

- OlencomPwTDMCfgPayloadSize – GS
- OlencomPwTDMCfgJtrBfrDepth – GS
- OlencomPwTDMCfgRtpHdrUsed – GS

Private MIBs

There are two types of private MIBs:

- MIBs that are extensions of standard and draft MIBs related to pseudowires and TDM
- MIBs that are defined for system purposes

PW/TDM Private MIBs

- OlencomPwXTable – augments OlencomPwTable
- OlencomPwXTos – GS
- OlencomPwXVlanMode – GS
- OlencomPwXVlanId – GS
- OlencomPwXVlanPriority – GS
- OlencomPwXResetCounters – GS
- OlencomPwTDMCfgXTable – augments OlencomPwTDMCfgTable
- OlencomPwTDMCfgXPayloadFrames - GS
- OlencomPwPerfTotalXTable - total table storing counters for all pseudowires. Counters are reset when a pseudowire is deleted or disabled
- OlencomPwPerfTotalXInPackets – G
- OlencomPwPerfTotalXOperStatTrans – G
- OlencomPwPerfTotalXLocalStatTrans – G
- OlencomDs0BundleAssignTable – stores timeslot assignments for DS0-Bundles (replaces ifStackTable)
- dsx0BundleIndex – G (index)
- dsx1LineIndex – G (index)
- OlencomDs0BundleAssignDs0Map – GS
- OlencomDs0BundleAssignDs0RowStatus – GS
  - active
  - createAndGo
  - destroy
- OlencomTimingMode - stores the global clock mode setting – GS
- OlencomPwTDMPerfTotalTable - stores counters for all pseudowires. Counters are reset when a pseudowire is deleted or disabled
- OlencomPwTDMPerfTotalMissingPkts – G
- OlencomPwTDMPerfTotalPktsReOrder – G
- OlencomPwTDMPerfTotalJtrBfrUnderruns – G
- OlencomPwTDMPerfTotalMisOrderDropped – G
- OlencomPwTDMPerfTotalMalformedPkt – G

System Private MIBs

- OlencomConfigFilename – G
- OlencomSwActualFilename – G
- OlencomSwConfiguredFilename – GS
- OlencomSwServer – GS
- OlencomSwStatus – GS
- OlencomClockDateAndTime – GS

SNMP Private MIBs

- OlencomTrapDestAvailIndex – G
- OlencomTrapDestTable – this table replaces the RMON2 trapDestTable table
- OlencomTrapDestIndex – GS
- OlencomTrapDestCommunity – GS
- OlencomTrapDestAddress – GS
- OlencomTrapDestRowStatus – GS

Irregular Functionality

This section describes MG-IP functionality that differs from the typical functionality described in standards and drafts.

Manual Administrative Status

A number of Set operations require that the managed entity be disabled, and will fail if carried out on enabled entities. It is the responsibility of the user to ensure that the entities are disabled. Pseudowires and DS1 (E1/T1) ports are entities that must be disabled before subjected to Set operations.

DS0-Bundle-MIB

The standard DS0-bundle functionality utilizes the standard ifStackTable as a means of aggregating numerous DS0s. However, this is a very cumbersome method, both for agent and for NMS implementors.

To overcome this complexity and avoid implementation of the DS0-MIB, the private table OlencomDs0BundleAssignTable is used to assign timeslots to the relevant DS0-bundle. This table is designed so that it can be used to assign timeslots from 1 to n ports, as needed.

The same DS0s may be assigned to multiple DS0-bundles. However, assigning multiple DS0s to different pseudowires is not permitted. This means that if users try to assign a specific DS0 that has already been assigned via a DS0-bundle, or via a DS1 port to another pseudowire, they will fail.

Note that initially, a single assignment per bundle is allowed.

Updating DS0-bundle timeslots

Updating parameters of DS0-bundles assigned to pseudowires is not allowed.

If such updates are needed, the attachment to the pseudowire must be removed and then reassigned when the update is completed.

dsx0BundleNextIndex Values

dsx0BundleNextIndex will start with one. It will wrap back to one when it reaches 2^23 = 8388608.

DS1 MIB

Setting of dsx1LineType and Correlation with Framing Mode

Currently, there are limitations with regards to changing line type from E1 and T1. These changes require database initialization and rebooting of the system. Consquently, several values of dsxLineType cannot be set. There is also a direct connection between dsx1LineType and the framing mode. Line type values define whether the port is framed (if there are DS0s assigned to this port). For this reason, dsx1Channelization is read-only and its value depends on that of the line type.

When farming mode is changed (thus number of valid timeslots may change), it may have neither pseudowires (via OlencomPwTDMIfIndex) or DS0-bundles associated with it.

Table 36 presents the behavior described above.

Table 36:Correlation between dsx1LineType and Framing Mode

dsx1LineType value	Allowed transaction from value:	dsx1Channelization values	PW/DS0-bundle attachment
dsx1ESF	dsx1D4, dsx1Unframed	enabledDs0	Allowed for dsx1D4
dsx1D4	dsx1ESF, dsx1Unframed	enabledDs0	Allowed for dsx1ESF
dsx1Unframed	dsx1ESF, dsx1D4	Disabled	Not allowed
dsx1E1	dsx1E1MF, dsx1E1Unframed	enabledDs0	Not allowed
dsx1E1MF	dsx1E1, dsx1E1Unframed	enabledDs0	Not allowed
dsx1E1Unframed	dsx1E1MF, dsx1E1	Disabled	Not allowed

dsx1SignalMode Functionality

This parameter's functionality changes according to the value of dsx1LineType and dsx1LineType. In E1, the parameter is read-only, while in T1, it can be set in several modes.

When the user sets the dsx1LineType, the following behavior is implemented:

- In E1 – the change will automatically cause the dsx1SignalMode to be updated to the correct value
- In T1 – the change to dsx1Unframed will cause the dsx1SignalMode value to change to "none". When changing from dsx1ESF to dsx1D4 or visa versa, dsx1SignalMode will remain as configured.

Table 37: dsx1SignalMode Functionality

dsx1LineType Value	**Dsx1SignalMode Value**	**Allowed Functionality**
dsx1ESF	none (1) or robbedBit (2)	Get/Set
dsx1D4	none (1) or robbedBit (2)	Get/Set
dsx1Unframed	none (1)	Get only
dsx1E1	none (1)	Get only
dsx1E1MF	bitOriented (3)	Get only
dsx1E1Unframed	none (1)	Get only

dsx1LineMode Functionality

dsx1LineMode setting is supported in E1 as well as in T1. This is an extension to the standard, which defines T1 setting only.

PW Name Issues

OlencomPwName is mandatory. It must be a unique name of up to 31 characters. It is the responsibility of the manager to provide this unique name.

Pseudowire PSN Type

The type access is read-only. PSN types change dynamically according to the TDM circuit attached to them.

Table 38: Pseudowire PSN Type

PSN Type	TDM circuit
Other	Not assigned
e1Satop	Unchannelized E1 port
t1Satop	Unchannelized T1 port
basicCesPsn	Full channelized port no CAS
basicCesPsn	DS0-bundle no CAS
tdmCasCesPsn	Full channelized port with CAS
tdmCasCesPsn	DS0-bundle with CAS

PW Admin Status Behavior and TDMIfIndex Assignment

A pseudowire cannot be enabled (OlencomPwAdminStatus = “up”) when there is no TDM port or DS0-bundle with timeslots assigned. For this reason, the default status is set to “down”. The following actions must be taken when creating a pseudowire:

1. Create a pseudowire in the OlencomPwTable
2. Set the relevant DS1 or DS0-bundle index to OlencomPwTDMIfIndex
3. Set admin status to “up”

Usage of OlencomPwOutboundLabel and OlencomPwInboundLabel in OlencomPwTable

The parameters OlencomPwOutboundLabel and OlencomPwInboundLabel are defined in the standard to be used when the pseudowire is configured for transport using MPLS or L2TP.

Olencom’s implementation uses these parameters to Set and Get the UDP destination and source ports, respectively, when OlencomPwPsnType is defined as “IP”. This is performed as the draft does not describe MIB parameters for this purpose. In the future, a draft (then a standard) MIB may be defined for storage of UDP parameters.

Usage of OlencomPwOutboundLabel and OlencomPwInboundLabel in OlencomPwTable

Currently, payload size needs be set in frames. OlencomPwTDMCfgXPayloadFrames is used to achieve this. OlencomPwTDMCfgPayloadSize is read-only and changes according to the payload configured in frames and the bandwidth of the TDM circuit assigned to the pseudowire.

Interaction between OlencomPwTDMTable and OlencomPwTDMCfgTable

The draft calls for OlencomPwTDMCfgTable entries to be created. These entities can then be assigned to entries contained in the OlencomPwTDMTable. More than one OlencomPwTDMEntry may point to

the same OlencomPwTDMCfgEntry. Therefore, they share the same configuration parameters. Assignment is performed using the OlencomPwVcGenTDMCfgIndex parameter.

In the first phase, exactly one OlencomPwTDMCfgEntry is assigned to each OlencomPwTDMEntry. It is automatically created and assigned during the creation of the OlencomPwTDMEntry.

Private MIB - General Definitions

Please refer to the following explanations of the various structure entries:

- Olencom - 24222 IANA assigned number
- OlencomProducts - stores product definitions (used as a value returned by SysObjectId)
- OlencomCommon - stores private MIBs shared by all products
  - OlencomSystem - stores private MIBs relevant to the system
  - OlencomSnmp - stores private MIBs related to SNMP
  - OlencomTransmission - stores private MIBs related to transmission protocols
- OlencomExp - stores MIBs that are in the experimental stage (for which IETF & IANA drafts have not yet been submitted)
- OlencomSnmpModules - stores all Olencom private MODULE-IDENTIFIERS

MIB Relations

Figure 39 below illustrates the relations between the various MIBs supported.

Figure 39: MIB Relations

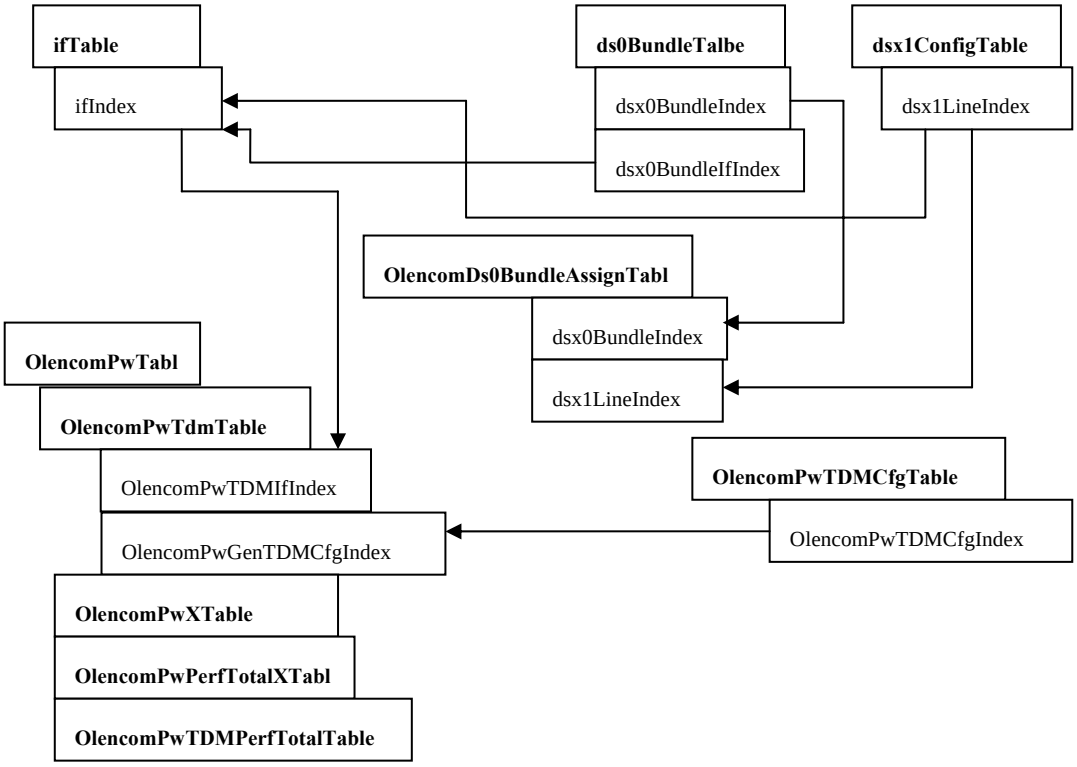

Please refer to the following clarifications:

- DS0-bundle and DS1 are assigned entries in the ifTable
- The pseudowire (stored in OlencomPwTable) holds a pointer to either the DS1 ifIndex or to the DS0-bundle ifIndex
- For each pseudowire (stored in OlencomPwEntry), entries are automatically created in the following tables:
- OlencomPwXTable - Extended table with Olencom-specific parameters
- OlencomPwPerfTotalXTable - pseudowire-specific counters with totals from beginning of session activation until session is removed or disabled
- OlencomPwTDMTable - draft table storing TDM-related parameters
- OlencomPwTDMPerfTotalTable – draft table storing pseudowire TDM-specific counters with totals from beginning of session activation until session is removed or disabled
- OlencomPwTDMCfgTable - draft table storing an entry for each pseudowire (created automatically)
- OlencomDs0BundleAssignTable - stores the assignment of the DS1 port timeslot to the specific DS0-bundle

SNMP Request Manager Configuration

SNMP requires that managers be configured. Note that if no SNMP managers are configured, access is unrestricted (this is the default setting).

Currently, there is no way to configure managers via SNMP (this can only be done via CLI/RCP).

Configuration Sequence

Pseudowire Creation with Assigned DS-1 Port

Target configuration: pseudowire with index 1, DS1-1 with ifIndex 134250496, IP address 10.100.10.2 and Payload size = 200.

Table 39: Pseudowire Creation with Assigned DS-1 Port

Description	OID	Value	Action
Get valid pseudowire index	OlencomPwIndexNext.0		Get (receive 1)
Create pseudowire with IP address	OlencomPwPeerAddr.1	10.100.10.2	Set
	OlencomPwName	“s01”	
	OlencomPwRowStatus.1	createAndGo	
Set payload size	OlencomPwTDMCfgPayloadSize.1	200	Set
Set DS1 to be used channels	OlencomPwTDMIfIndex.1	134250496	Set
Enable session	OlencomPwAdminStatus.1	up(1)	Set

Pseudowire Creation with Assigned Timeslots

Target configuration:

- Pseudowire with index 1
- Timeslots (DS0s) 1,2,3 from DS1-1 with ifIndex 134250496
- IP address 10.100.10.2
- Payload size = 200

To achieve this configuration, perform the steps described in Table 40.

Table 40: Pseudowire Creation with Assigned Timeslots

Description	OID	Value	Action
Disable DS1 port	ifAdminStatus.134250496	down	Set
Set DS1 framing	dsx1LineType.134250496	dsx1E1	Set
Enable DS1 port	ifAdminStatus.134250496	up	Set
Get DS0-Bundle next index	dsx0BundleNextIndex.0	(Receive 1)	Get
Create DS0-Bundle (set dsx0BundleNextIndex to increment it)	dsx0BundleNextIndex.0	1	Set (bundle with ifIndex 1073741825 is created)
	dsx0BundleRowStatus.1	createAndGo	
Assign DS0s to bundle	OlencomDs0BundleAssignDs0Map.1.134250496	0xE	Set
	OlencomDs0BundleAssignDs0RowStatus.1.134250496	createAndGo	
Get valid pseudowire index	OlencomPwIndexNext.0		Get (receive 1)
Create pseudowire with IP address	OlencomPwPeerAddr.1	10.100.10.2	Set
	OlencomPwName	“s01”	
	OlencomPwRowStatus.1	createAndGo	
Set payload size	OlencomPwTDMCfgXPayloadFrames.1	8	Set
Assign DS0-Bundle to pseudowire	OlencomPwTDMIfIndex.1	1073741825 (IfIndex of bundle)	Set
Enable pseudowire	OlencomPwAdminStatus.1	up	Set

Updating DS1 Parameters

To update the parameters of DS1 #1 from the configuration described above, perform the steps described in Table 41.

Table 41: Updating DS1 Parameters

Description	OID	Value	Action
Disable pseudowire	OlencomPwAdminStatus.1	down	Set

Remove DS0-bundle from pseudowire	OlencomPwTDMIfIndex.1	0	Set
Remove DS0s from bundle	OlencomDs0BundleAssignDs0RowStatus.1.100	destroy	Set
Disable DS1 port	ifAdminStatus.134250496	down	Set
Update DS1 parameters	dsx1LineCoding.134250496	value	Set
Enable DS1 port	ifAdminStatus.100	up	Set
Assign DS0s to bundle	OlencomDs0BundleAssignDs0Map.1.134250496	0xE	Set
	OlencomDs0BundleAssignDs0RowStatus.1.134250496	createAndGo	
Assign DS0-Bundle to pseudowire	OlencomPwTDMIfIndex.1	1073741825 (IfIndex of bundle)	Set
Enable pseudowire	OlencomPwAdminStatus.1	up	Set

Updating the Pseudowire's Attached Timeslots

Changing the timeslots of the pseudowire from the previous example from 1,2,3 to 7,8,9,10.

Table 42: Updating the Pseudowire's Attached Timeslots

Description	OID	Value	Action
Disable PW	OlencomPwAdminStatus.1	down	Set
Remove DS0-bundle from PW	OlencomPwTDMIfIndex.1	0	Set
Assign DS0s to bundle	OlencomDs0BundleAssignDs0Map.1.134250496	0x03 0xC0	Set
Assign DS0-Bundle to PW	OlencomPwTDMIfIndex.1	1073741825 (IfIndex of bundle)	Set
Enable PW	OlencomPwAdminStatus.1	up	Set
Disable PW	OlencomPwAdminStatus.1	down	Set

Setting SNMP Trap Destination

Configuration: community string: 'public'; trap destination: IP 10.10.10.10.

Table 43: Setting SNMP Trap Destination

Description	OID	Value	Action
Get valid trap destination index	OlencomTrapDestIndexNext.0		Get (Retrieve1)
Create trap	OlencomTrapDestCommunity.1	public	Set

Description	OID	Value	Action
destination entry	OlencomTrapDestAddress.1	10.10.10.10	
	OlencomTrapDestRowStatus.1	createAndGo	

Upgrading the Software Image

Configuration:

- New image filename – "MG-IP-1-R03.03.00_D013.zip"
- TFTP server IP 10.10.10.10

Table 44: Upgrading the Software Image

Description	OID	Value	Action
Create trap destination entry	OlencomSwConfiguredFilename	MG-IP-1-R03.03.00_D013.zip	Set
	OlencomSwServer	10.10.10.10	
	OlencomSwStatus	activate	

Traps

The MG-IP-1 and MG-IP-4 send the following traps to all defined trap communities:

- coldStart (RFC 3418)

  This trap is sent when the unit has been powered up or reset with a command such as the CLI command \c\rr or\c\rl.

- linkDown (RFC 2863)

  The trap is sent whenever the LAN or WAN ports transition from Up to Down

- linkUp (RFC 2863)

  The trap is sent whenever the LAN or WAN ports transition from Down to Up

- authenticationFailure (RFC 3418)

  The trap is sent whenever the SNMP agent receives an operational request from an unrecognized community name.

- dsx1LineStatusChange (RFC 3895)

  The trap is sent when one of the T1/E1 ports is enabled and changes state according to the options in the MIB variable.

Default SNMP Settings

There is no restriction on request managers and access is granted to all request manageres. There are no default SNMP TRAP managers defined. See Managing SNMP on page 125.

Complete Configuration Examples

The examples presented in this section demonstrate complete configuration sequences.

- Parameters must be grouped (set in the same PDU), as described in the manual. Grouping refers to multiple rows that are set in a single action.

For example, “Create PW with IP address” has three parameters (rows) that are set with a single Set action.

- Some actions describe a Get operation – its purpose is to get the next relevant index to be used.
- This manual assumes that no configuration has been applied to the device. Parameters in the examples are therefore set with the first valid index.

For example: in the default configuration, the OlencomTrapDestIndexNext Get operation receives index 1. The rest of the example therefore uses index 1.

- The two examples are independent of each other and must start with a default configuration.

Unframed Pseudowire

Example of SNMP usage to set the following configuration:

- Trap destination:
- Community: public
- IP: 10.10.10.10
- DS1 port (T1):
- Unframed (default), therefore not set
- PW:
- IP 10.100.10.2
- Name “s01”
- Payload size (in frames) 8

Description	OID	Value	Action
Trap Destination			
Get valid trap destination index	OlencomTrapDestIndexNext.0		Get (Retrieve1)
Create trap destination entry	OlencomTrapDestCommunity.1	Public	Set
	OlencomTrapDestAddress.1	10.10.10.10	
	OlencomTrapDestRowStatus.1	createAndGo	
PW			
Get valid PW index	OlencomPwIndexNext.0		Get (Receive 1)
Create PW with IP address	OlencomPwPeerAddr.1	10.100.10.2	Set
	OlencomPwName	“s01”	
	OlencomPwRowStatus.1	createAndGo	
Set payload size	OlencomPwTDMCfgPayloadFrames.1	8	Set
Assign DS0-Bundle to PW	OlencomPwTDMIfIndex.1	134250496 (IFIndex of **DSL port**)	Set

Enable PW	OlencomPwAdminStatus.1	up	Set

Framed Pseudowire

Example of SNMP usage to set the following configuration:

- Trap destination:
- Community: public
- IP: 10.10.10.10
- DS1 port (T1):
- Framing ESF
- DS0-bundle:
- Timeslots 1, 2, 3 of DS1 port
- PW:
- IP 10.100.10.2
- Name “s01”
- Payload size (in frames) 8

5 Command Line Interface

This chapter describes the command line interface (CLI) used to configure MG-IP units and to display device configuration and status. See Appendix A for a description of each command.

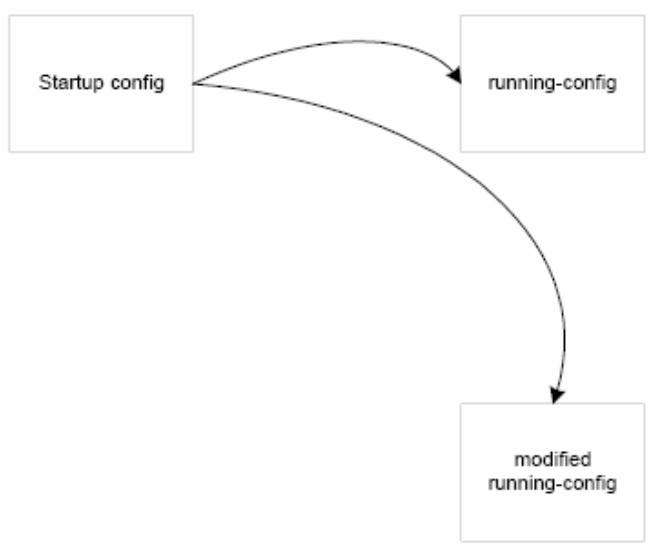

The MG-IP-1 and MG-IP-4 feature an internal, non-volatile database that is activated when the device is powered up or restarted. This database is called the Startup Config. At power on, the Startup config is copied to two locations: the running-config and the modified running-config.

The database contains all the information necessary to configure the MG-IP units for an application. The initial values of the database are the default conditions of the device.

CLI commands are used to change the configuration parameters to adapt to a specific MG-IP application. Most parameter changes are made to the modified running-config.

Once the modified running-configuration has been validated, replace the Startup config with the

modified running-configuration using the “replace” (rp) command.

Use the “reload” (rl) command to restart the MG-IP with the Startup Config.

The “ReplaceReload” (rr) command replaces the Startup config with the modified runningconfiguration

and reloads the Startup config with a single comman

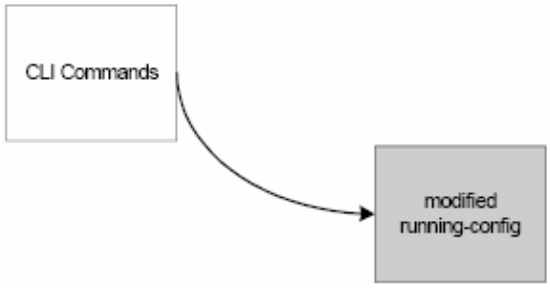

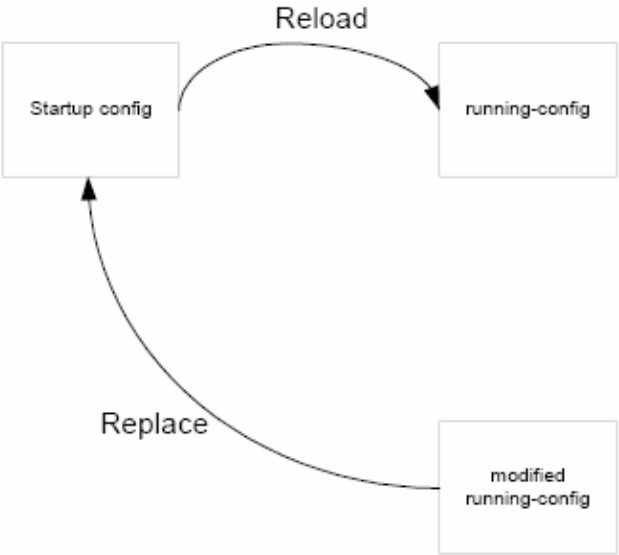

The GetConfiguration (gc) command, used to display configuration information in various contexts, displays two sets of values: the parameters in the running-config and the corresponding values in the modified running-config.

How to Access the CLI

This section describes how to access the CLI to configure the system.

Connecting via the CONSOLE Port

The CONSOLE is configured for the following parameters:

- Baud Rate: 115200
- Data Bit: 8
- Stop Bit: 1
- Parity: None
- Flow Control: None

To connect to the CONSOLE port:

1. Connect to the CONSOLE using a serial connection and a “dumb” terminal or a character terminal emulator such as Hyper terminal or a PC command window.
2. Press enter. The MG-IP responds with a login prompt.
3. Enter your login name and press enter. The MG-IP responds with a password prompt.
4. Enter your password and press enter. The MG-IP responds with a command prompt: (MG-IP-1:\>).

The MG-IP is initially configured with a default administrator user with login name admin and password admin. The administrator may have changed the password to this account, and may also have created other accounts. For more information on user accounts and account types, refer to Managing Users on page 68.

Connecting via Telnet and a Network Interface

The LAN and WAN ports are configured with an IP address of 169.254.1.100 (Master) or 169.254.1.101 (Slave). Both ports are configured with a subnet mask of 255.255.255.0. The user can connect via Telnet to the defined IP address using HyperTerminal or a command window on a PC or any other Telnet client. Once the connection is made, the MG-IP will respond with the login prompt.

If the IP address needs to be changed to another value before making a network connection, first connect via the CONSOLE and change the LAN or WAN IP address and subnet mask using the following command:

- SetIPConfig (sic) (see page A-105 in Appendix A)

CLI Command Description Conventions

The command descriptions in this document follow the following conventions:

- Command names and their abbreviations are shown in bold font.
- Command arguments are shown in angle brackets (< >).
- Required alternative keywords are grouped in braces and separated by vertical bars ({A|B|C}).
- Elements in square brackets ([ ]) are optional.
- Screen fonts are used in examples of user entry and resulting output. User entry examples are in **bold screen font**.

If the user enters a command preceded or followed by a question mark (?), help is displayed, providing immediate help formatting commands, as shown in the following example:

MG-IP-1:\Config\LAN>**? sce**

Configures Ethernet interface.

Parameters: <speed: {10|100|Auto}> [<duplex-mode: {Full|Half}>]

The CLI command parser evaluates each parameter and generates an error on the first error found, for example, entering sce q (the first parameter must be “100”, “10”, or “minimal”) results in a parser error:

Error, Parameter 1, wrong value (keyword)

The following message is returned if the entered parameters are parsed correctly:

The request was updated successfully in modified running_config.

If the command entered changes a dynamic parameter - one that is not recorded in the database - for example, a dynamic loopback command, the following message is returned:

The command completed successfully.

If the entered parameters parse correctly but not all required parameters are entered or the entered values are an incorrect combination for the selected command, the following message is sent:

Modified-running-config was not updated or accessed with this request.

See the description of SetConfigCESClock on page A-83 in Appendix A for an example of how the value of one parameter can constrain the value of other parameters.

CLI Command Hierarchy

The CLI commands are organized in a directory structure, as shown in **Ошибка! Источник ссылки не найден.**. Each directory contains subdirectories and/or commands.

The following commands are used to navigate the command directories:

- dir or ? - lists the commands and sub-directories in the current directory.
- up arrow and down arrow - display previously entered commands (up to the last 12)
- Entering a sub-directory name or its full abbreviation (displayed to the left of the directory name) transfers control to that directory. One can move down the hierarchy by more than one level by entering the desired sub-directory path, with "\" separating the directory names, for example

  MG-IP-1:\>**m\lan**

  MG-IP-1:\Monitor\LAN>
- Starting with "\" allows entering the path to a directory starting from the root directory, for example:

  MG-IP-1:\Monitor\LAN>**c\lan**

  MG-IP-1:\Config\LAN>
- If the full path to a directory is entered followed by a command, the default directory when the command was entered will remain the same., for example, this command displays the console configuration but leaves the default directory the TDM over Packet directory:

  MG-IP-1:\Config\TDM_Over_Packet>..**cons\gc**

	Running_config	Modified Running_config
Baud rate .....:	115200	115200
Stop bit .....:	1	1
Protocol .....:	Term	Term
Mode.....:	Enabled	Enabled

  MG-IP-1:\Config\TDM_Over_Packet**>**
- Entering ".." moves up the directory hierarchy one level. This can be repeated (..\..) or combined with directory names to move up and down the hierarchy, for example

  MG-IP-1:\Config\E1\Port_3>..\..**top**

  MG-IP-1:\Config\TDM_Over_Packet>
- You can optionally enter cd before any of the above directory navigation commands.

  MG-IP-1:\Monitor\LAN>**cd \c\lan**

  MG-IP-1:\Config\LAN>
- lo logs you out of your session and displays the login prompt.

Figure 40: Command Directory Hierarchy

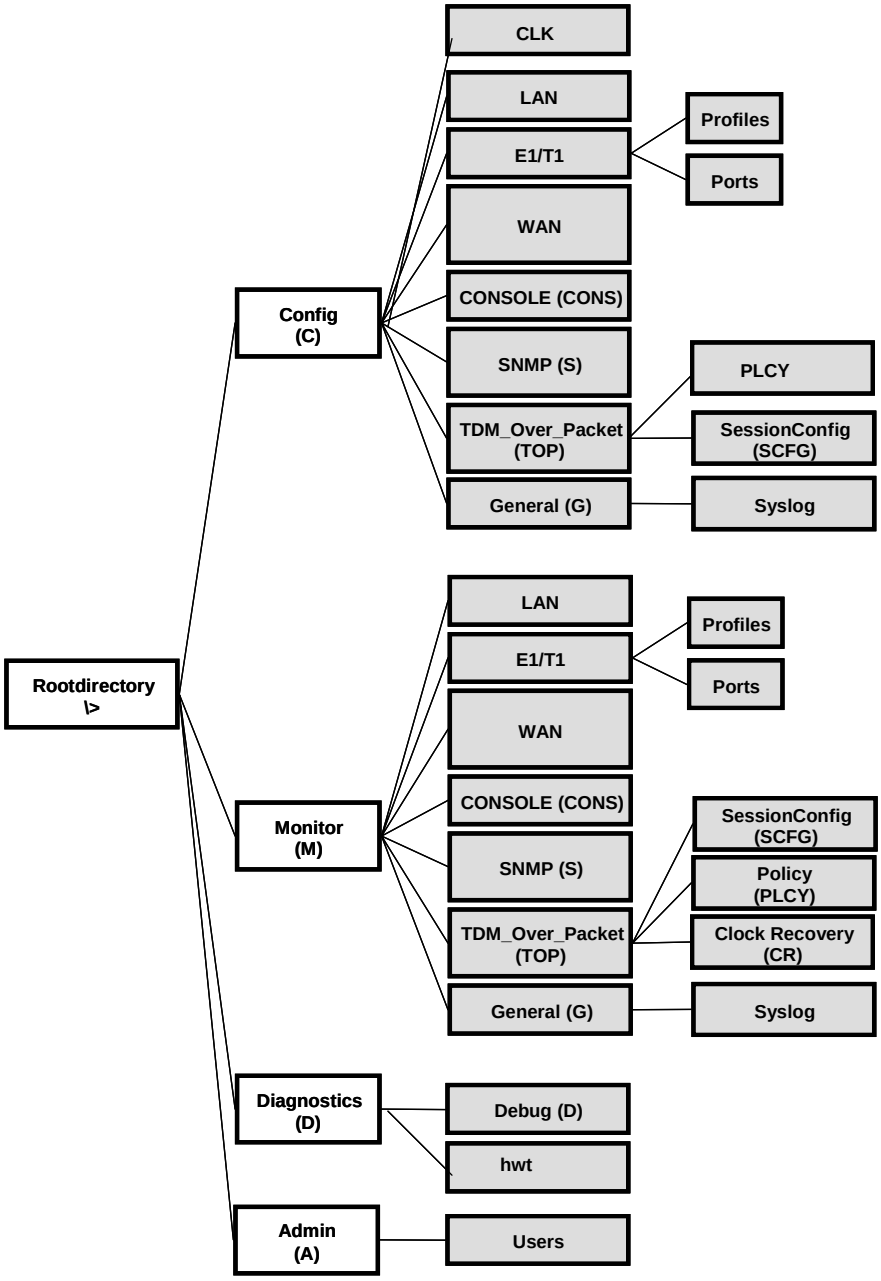

Certain commands with the same name appear in more than one sub-directory. The command functions differently depending on the context, for example, the GetConfig (gc) command displays different results depending on the interface or application directory where it is executed.

Summary of CLI Commands

The commands in each CLI sub-directory are listed below.

> The Monitor command hierarchy is the same as the Config command hierarchy, except that the Config hierarchy includes commands for both viewing and setting configurations, while the Monitor hierarchy includes only commands for viewing configurations. A user with View privileges will only have access to the Monitor directory. See Managing Users on page 68.

Configuration Commands

MG-IP-1:\Config>**dir**

<dir>	CLK	Clock directory
<dir>	LAN	LAN
<dir>	E1	E1
<dir>	WAN	WAN
<dir>	CONS	CONSOLE
<dir>	S	SNMP
<dir>	ToP	TDM_Over_Packet
<dir>	G	General
	gsb	GetStatusBoard (see page A-58 in Appendix A)
	gci	GetConfigIfs (see page A-32 in Appendix A)
	gsi	GetStatusIfs (see page A-59 in Appendix A)
	gcu	GetConfigUarts (see page A-33 in Appendix A)
	gdt	GetDateTime (see page A-34 in Appendix A)
	gv	GetVersion (see page A-65 in Appendix A)
	rr	Reload (see page A-69 in Appendix A)
	rp	Replace (see page A-75 in Appendix A)
	rl	ReplaceReload (see page A-76 in Appendix A)

Clock configurathion

MG-IP:\Config\clk >**dir**

sccm	(see page A-82 in Appendix A)
secf	(see page A-102 in Appendix A
ccts	(see page A-16 in Appendix A)
sac	(see page A-78 in Appendix A)
gc	(see page A-26 in Appendix A)
secd	**(**see page A-101 in Appendix A

gcs **(**see page A-25 in Appendix A

lc **(**see page A-66 in Appendix A)

Ethernet Configuration Commands (LAN & WAN)

MG-IP-1:\Config\LAN>**dir or**

MG-IP-1:\Config\WAN>**dir**

sce SetConfigEth (see page A-88 in Appendix A)

scef SetConfigEthFlowControl (see page A-89 in Appendix A)

cel setConfigEthLimit (**only WAN**. See page A-90 in Appendix A)

sic SetIPConfig (see page A-105 in Appendix A)

gst GetStatistics (see page A-52 in Appendix A)

sdml SetDynamicMACLpbk (see page A-99 in Appendix A)

gc GetConfig (see page A-26 in Appendix A)

gs GetStatus (see page A-55 in Appendix A)

ac ApplyChanges (see page A-9 in Appendix A)

T1/E1 Configuration Commands

MG-IP-1:\Config\E1>**dir or**

MG-IP-1:\Config\T1>**dir**

spoe SetPortsEnable (see page A-114 in Appendix A)

spod SetPortsDisable (see page A-113 in Appendix A)

gst GetStatistics (see page A-52 in Appendix A)

gc GetConfig (see page A-26 in Appendix A)

gs GetStatus (see page A-55 in Appendix A)

grcp GetRunningConfigPorts (see page A-46 in Appendix A)

gmcp GetModifiedConfigPorts (see page A-43 in Appendix A)

sll SetLIULpbk (see page A-109 in Appendix A)..\pf1

sldl SetLIUDynamicLpbk (see page A-108 in Appendix A)

<dir> P1 Port_1

<dir> Pf1 Profile_1

Port Configuration Commands

MG-IP-1:\Config\E1\Port_1>**dir**

sll SetLIULpbk (see page A-109 in Appendix A)

sldl SetLIUDynamicLpbk (see page A-108 in Appendix A)

sfp SetFramedParams (see page A-103 in Appendix A)

spos SetPortState (see page A-115 in Appendix A)

scb SetChannelBandwidth (see page A-80 in Appendix A)

gs GetStatus (see page A-55 in Appendix A)

gc GetConfig (see page A-26 in Appendix A)

gst GetStatistics (see page A-52 in Appendix A)

gss GetSnmpStatistics (see page A-48 in Appendix A)

Profile Definition Commands

MG-IP-1:\Config\E1\Profile_1>**dir**

sllc SetConfigLIULineCode (see page A-92 in Appendix A)

sltt SetConfigLIULineBuildout (see page A-91 in Appendix A)

slrt SetConfigLIURxTerm (see page A-93 in Appendix A)

sreg SetRxEqualizerGainLimit (see page A-119 in Appendix A)

gc GetConfig (see page A-26 in Appendix A)

CONSOLE Configuration Commands

MG-IP-1:\Config\CONSOLE>**dir**

scu SetConfigUART (see page A-95 in Appendix A)

gc GetConfig (see page A-26 in Appendix A)

SNMP Configuration Commands

MG-IP-1:\Config\SNMP>**dir**

arm AddRequestManager (see page A-6 in Appendix A)

rrm RemoveRequestManager (see page A-70 in Appendix A)

grm GetRequestManagers (see page A-44 in Appendix A)

atm AddTrapManager (see page A-7 in Appendix A)

rtm RemoveTrapManager (see page A-73 in Appendix A)

gtm GetTrapManagers (see page A-63 in Appendix A)

srp SetRequestPort (see page A-117 in Appendix A)

stp SetTrapPort (see page A-128 in Appendix A)

gp GetRequestTrapPorts (see page A-45 in Appendix A)

gsd GetSystemDesc (see page A-61 in Appendix A)

gst GetStatistics (see page A-52 in Appendix A)

TDM over Packet Configuration Commands

MG-IP-1:\Config\TDM_Over_Packet>**dir**

sse SetTDMoPSessionEnable (see page A-127 in Appendix A)

ssd SetTDMoPSessionDisable (see page A-126 in Appendix A)

cclk SetConfigCESClock (see page A-83 in Appendix A)

ccpl SetConfigCESPayLength (see page A-86 in Appendix A)

cet SetConfigCESEmulationType (see page A-84 in Appendix A)

sctm SetCESAppTestMode (see page A-79A-11 in Appendix A)

	clib	CalibrateJitter (see page A-11 in Appendix A)
	slta	SetLayer2App (see page A-106 in Appendix A)
	ggc	GetGlobalConfig (see page A-37 in Appendix A)
	adds	AddNewSession (see page A-5 in Appendix A)
	ssp	SetSessionPorts (see page A-120 in Appendix A)
	ssts	SetSessionTimeSlots (see page A-121 in Appendix A)
	spoe	SetPortsEnable (see page A-114 in Appendix A)
	spod	SetPortsDisable (see page A-113 in Appendix A)
	gc	GetConfig (see page A-26 in Appendix A)
	gs	GetStatus (see page A-55 in Appendix A)
	gsts	GetSessionTimeSlots (see page A-47 in Appendix A)
	gstm	GetTimeSlotsMap (see page A-62 in Appendix A)
	ls	ListOfSessions (see page A-67 in Appendix A)
	gss	GetShortStatusOfAllSessions
	lbit	SatopSendLBitOnAIS see page A-77 in Appendix A
	sps	SetPayloadSuppression see page A-111A-26 in Appendix A
	cmet	
<dir>	SCFG	Session_config
<dir>	PLCY	Alarm Policy
<dir>	CR	ClockRecovery

TDM Error Reporting Commands

MG-IP-1:\Config\TDM_Over_Packet\Policy>?

slp	SetLOPSPolicy see page A-110 in Appendix A
slfp	SetLFlagPolicy see page A-107 in Appendix A
srfp	SetRFlagPolicy see page A-118 in Appendix A
srdp	SetRDPolicy see page A-116 in Appendix A
sip	SetIdlePattern see page A-104 in Appendix A
ssi	SetSigIdle see page A-122 in Appendix A
gc	GetConfig see page A-26 in Appendix A
sps	SetPayloadSuppression see page A-111A-26 in Appendix A
lbit	SatopSendLBitOnAIS see page A-77 in Appendix A

MG-IP-1:\Config\General\Syslog>?	
ssle	SetSyslogEnable see page A-124 in Appendix A
ssld	SetSyslogDisable see page A-123 in Appendix A
ssls	SetSyslogServer see page A-125 in Appendix A
rsls	RemoveSyslogServer see page A-72 in Appendix A
gc	GetConfig (see page A-26 in Appendix A)

Session Configuration Commands

MG-IP-1:\Config\TDM_Over_Packet\Session_config>**dir**

sse	SetTDMoPSessionEnable (see page A-127 in Appendix A)
ssd	SetTDMoPSessionDisable (see page A-126 in Appendix A)
cclk	SetConfigCESClock (see page A-83 in Appendix A)
ccpl	SetConfigCESPayLength (see page A-86 in Appendix A)
clib	CalibrateJitter (see page A-11 in Appendix A)
ccip	ConfigSesTargetIP (see page A-15 in Appendix A)
ccvl	SetConfigCESVlan (see page A-87 in Appendix A)
scm	SetConfigMPLS (see page A-94 in Appendix A)
rens	RenameSession (see page A-74 in Appendix A)
adds	AddNewSession (see page A-5 in Appendix A)
rms	RemoveSession (see page A-71 in Appendix A)
ssp	SetSessionPorts (see page A-120 in Appendix A)
ssts	SetSessionTimeSlots (see page A-121 in Appendix A)
shsc	ConfigHeaderSAT/CESoP (see page A-14 in Appendix A)
shce	ConfigHeaderCESoETH (see page A-13 in Appendix A)
sec	SetEmulationCircuitID (see page A-100 in Appendix A)
spe	SetPingEnable (see page A-112 in Appendix A)
gc	GetConfig (see page A-26 in Appendix A)
gs	GetStatus (see page A-55 in Appendix A)
gsts	GetSessionTimeSlots (see page A-47 in Appendix A)
ls	ListOfSessions (see page A-67 in Appendix A)
rtp	PwTDMCfgRtpHdrUsed (see page A-68 in Appendix A)

General Configuration Commands

MG-IP-1:\Config\General>dir

sdg	SetDefGateway (see page A-98 in Appendix A)
gdg	GetDefGateway (see page A-35 in Appendix A)
gma	GetMACAddress (see page A-42 in Appendix A)
scp	SetCLIPrompt (see page A-81 in Appendix A)
gcp	GetCLIPrompt (see page A-24 in Appendix A)
ggs	GetGlobalStatus (see page A-38 in Appendix A)
ggc	GetGlobalConfig (see page A-37 in Appendix A)
<dir> Slog	Syslog commands

Monitoring Commands

MG-IP-1:\Monitor>dir

<dir>	CLK	Clock directory
<dir>	LAN	LAN
<dir>	E1	E1
<dir>	WAN	WAN
<dir>	CONS	CONSOLE
<dir>	S	SNMP
<dir>	ToP	TDM_Over_Packet
<dir>	G	General
	gsb	GetStatusBoard (see page A-58 in Appendix A)
	gci	GetConfigIfs (see page A-32 in Appendix A)
	gsi	GetStatusIfs (see page A-59 in Appendix A)
	gcu	GetConfigUarts (see page A-33 in Appendix A)
	gdt	GetDateTime (see page A-34 in Appendix A)
	gv	GetVersion (see page A-65 in Appendix A)

Ethernet Monitoring Commands (LAN and WAN)

MG-IP-1:\Monitor\LAN>dir or

MG-IP-1:\Monitor\WAN>dir

gst	GetStatistics (see page A-52 in Appendix A)
sdml	SetDynamicMACLpbk (see page A-99 in Appendix A)
gs	GetStatus (see page A-55 in Appendix A)
gc	GetConfig (see page A-26 in Appendix A)
gss	GetSnmpStatistics (see page A-48 in Appendix A)
ac	ApplyChanges (see page A-9 in Appendix A)

T1/E1 Monitoring Commands

MG-IP-1:\Monitor\E1>dir or

MG-IP-1:\Monitor\T1>dir

	gst	GetStatistics (see page A-52 in Appendix A)
	gc	GetConfig (see page A-26 in Appendix A)
	gs	GetStatus (see page A-55 in Appendix A)
	grcp	GetRunningConfigPorts (see page A-46 in Appendix A)
	gmcp	GetModifiedConfigPorts (see page A-43 in Appendix A)
<dir>	P1	Port_1
<dir>	Pf1	Profile_1

Port Monitoring Commands

MG-IP-1:\Monitor\E1\Profile_1>dir

sldl SetLIUDynamicLpbk (see page A-108 in Appendix A)

gc GetConfig (see page A-26 in Appendix A)

gs GetStatus (see page A-55 in Appendix A)

gst GetStatistics (see page A-52 in Appendix A)

gss GetSnmpStatistics (see page A-48 in Appendix A)

Profile Definition Monitoring Commands

MG-IP-1:\Monitor\E1\Port_1>**dir**

gc GetConfig (see page A-26 in Appendix A)

CONSOLE Monitoring Commands

MG-IP-1:\Monitor\CONSOLE>**dir**

gc GetConfig (see page A-26 in Appendix A)

SNMP Monitoring Commands

MG-IP-1:\Monitor\SNMP>**dir**

grm GetRequestManagers (see page A-44 in Appendix A)

gtm GetTrapManagers (see page A-63 in Appendix A)

gp GetRequestTrapPorts (see page A-45 in Appendix A)

gsd GetSystemDesc (see page A-61 in Appendix A)

gst GetStatistics (see page A-52 in Appendix A)

gss GetSnmpStatistics (see page A-48 in Appendix A)

TDM over Packet Monitoring Commands

MG-IP-1:\Monitor\TDM_Over_Packet>**dir**

	gc	GetConfig (see page A-26 in Appendix A)
	gs	GetStatus (see page A-55 in Appendix A)
	gsts	GetSessionTimeSlots (see page A-47 in Appendix A)
	gstm	GetTimeSlotsMap (see page A-62 in Appendix A)
	ls	ListOfSessions (see page A-67 in Appendix A)
	gss	GetShortStatusOfAllSessions
<dir>	SCFG	Session_config
<dir>	PLCY	Policy
<dir>	CR	ClockRecovery

Session Configuration

MG-IP-1: \Monitor\TDM_Over_Packet>Session_config>**dir**

gc GetConfig (see page A-26 in Appendix A)

gs	GetStatus (see page A-55 in Appendix A)
gsts	GetSessionTimeSlots (see page A-47 in Appendix A)
ls	ListOfSessions (see page A-67 in Appendix A)

General Monitoring Commands

MG-IP-1:\Monitor\General>**dir**

gdg	GetDefGateway (see page A-35 in Appendix A)
gma	GetMACAddress (see page A-42 in Appendix A)
gcp	GetCLIPrompt (see page A-24 in Appendix A)
ggs	GetGlobalStatus (see page A-38 in Appendix A)
ggc	GetGlobalConfig (see page A-37 in Appendix A)
<dir> SLog	Syslog commands

Diagnostics Commands

MG-IP-1:\Diagnostics>**dir**

	fts	FunctionalTest (see page A-20 in Appendix A)
	gsb	GetStatusBoard (see page A-58 in Appendix A)
	b	Bert
	gbs	GetBertStatus
<dir>	D	Debug
<dir>	H	HWT

Debug commands should only be used by trained Olencom Inc. Service technicians.

Admin Commands

MG-IP-1:\Admin>**dir**

	gbd	GetBoardData (see page A-23 in Appendix A)
	gcds	GetConfigDBStatus (see page A-31 in Appendix A)
	gfs	GetFirmwareStatus (see page A-36 in Appendix A)
	gdt	GetDateTime (see page A-34 in Appendix A)
	sdt	SetDateTime (see page A-96 in Appendix A)
	sddb	SetDefaultDB (see page A-97 in Appendix A)
	dlf	DownLoadFile (see page A-18 in Appendix A)
	gids	GetInitDnldStatus
<dir>	u	Users

User Commands

MG-IP-1:\Admin\Users>**dir**

cp	ChangePassword (see page A-12 in Appendix A)
gu	GetUsers (see page A-64 in Appendix A)
gau	GetActiveUsers (see page A-21 in Appendix A)
au	AddUser (see page A-8 in Appendix A)
du	DeleteUser (see page A-17 in Appendix A)
sut	SetUserTimeout (see page A-129 in Appendix A)
ful	ForceUserLogout (see page A-19 in Appendix A)

CLI Command Descriptions

See Appendix A for a description of each command.

6 Testing the MG-IP

The Olencom Inc. MG-IP-1 and MG-IP-4 CLI has built-in tools for evaluating the performance of the device in test conditions and in customer installations. The tools include:

- Loopback options
- Statistics and status commands

Loopback Options

The CLI has three commands for setting up loopbacks on the device interfaces. These commands can be used for verifying correct MG-IP performance and for isolating link and network problems. The commands are:

- **SetDynamicMACLb** (**sdml**) -Sets MAC loopback on the WAN and LAN interfaces (only when the interface is configured as DTE)
- **SetLIUDynamicLb** (**sldl**) and **SetLIULb** (**sll**)- Set LIU/Framer internal loopback options on an individual port. sldl sets a loopback dynamically: It is cleared the next time the unit is reset. sll sets a loopback in the modified running-config that is stored in the startup config using the \c\rp command.
- **SetCESAppTestMode** (**sctm**) - Configures the TDM Over Packet CES application so it will operate without the presence of a paired MG-IP

The sll loopback can be disabled by entering the command with the parameter “disable”. The disabled state is stored in the startup config database with the \c\rp command.

Table 45 describes each loopback mode.

Table 45: Description of Loopback Modes

Loopback Mode	Description

MAC Loopback
 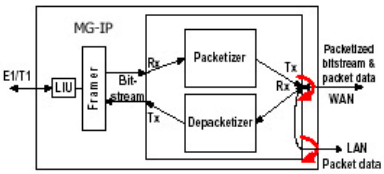
 	
	Applies to the WAN or LAN interface. The loopback can be set on each interface independently. Frames transmitted via an interface with the loopback set are looped back and received on the same interface. No frames are actually transmitted to or received from the packet network connected to the looped back interface.
	CLI Command:
	`\c\WAN\sdml on`
	`\c\lan\sdml on`

LIU Loopback-Local
 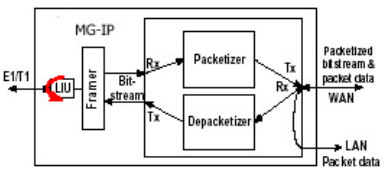
 	
	The LIU loops back the TDM bitstream transmitted to the T1/E1 port from the TRSEoIP. No data is transmitted to or received from the T1/E1 circuit. The clocking mode must be configured for Recovery, Internal or External (but not loopback) for this mode to operate.
	CLI Command:
	`\c\e1\p1\sldl local`
	`\c\e1\p1\sll local`

Loopback Mode	Description

LIU Loopback-Remote 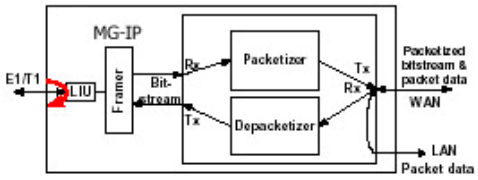	The LIU loops back the data stream received from the T1/E1 port. No data is transmitted to or received from the TRSEoIP.
	CLI Command:
	`\c\e1\p1\sldl remote`
	`\c\e1\p1\sll remote`

LIU Loopback-External 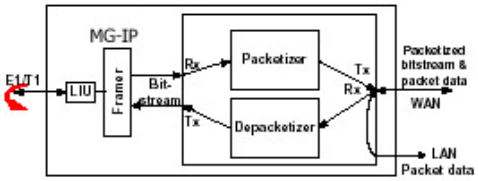	This command informs the firmware that the selected port has an external loop-back connector on it. The firmware will ignore spurious signaling and alarms detected in the looped back signal.
	CLI Command:
	`\c\e1\p1\sldl external`
	`\c\e1\p1\sll external`

The following examples show how the loopback settings can be used to verify operation of the MG-IP. The first example (Figure 41) shows a test setup using one T1/E1 tester connected to port 1 of a MG-IP, with a loopback connector on port 1 of a second MG-IP.

Figure 41: Loopback Test Setup-Single Port

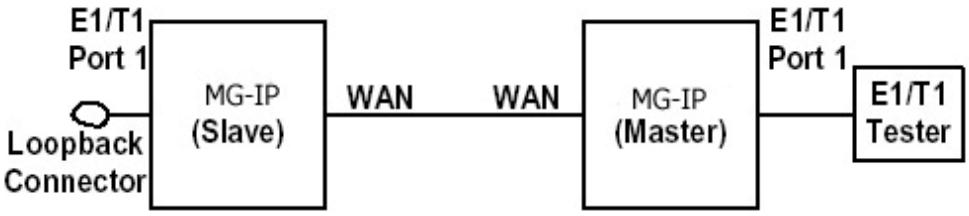

1. Connect two MG-IP-based units back-to-back using an Ethernet cable.
2. Connect a T1/E1 tester to port 1 of the MG-IP configured as master.
3. Configure the tester to framed mode and to use its internal clock.
4. Configure the LIU parameters and the tester line parameters so that line code, impedances, etc. are compatible.
5. Attach a loopback connector to port 1 on the MG-IP configured as Slave.

The tester and the status and statistics CLI commands or the Management Console status display can be used to evaluate module performance.

In a third example (Figure 42) configure a single MG-IP for a loopback test.

Figure 42: Loopback of the WAN Interface

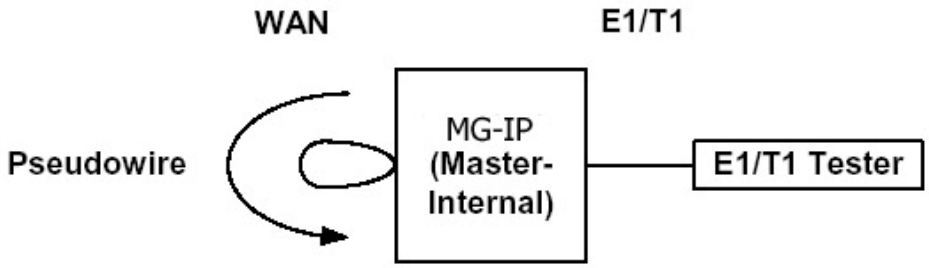

1. Define a pseudowire using the session mechanism.

Either connect an Ethernet loopback connector to the WAN Ethernet port or enter the following command:

\c\WAN\sdml

2. Set an application loopback so that the MG-IP will process pseudowire traffic correctly.

\c\top\sctm

Using the Get Status Command to Evaluate Performance

The CES application GetStatus CLI command reports on the status of the performance of the network and the MG-IP. The following is a sample output of the command:

```
MG-IP-1:\Config\TDM_Over_Packet>gs s01
Session s01 Status
Clocking mode ..................................:  Line 1 master
Eth to TDM direction.............: ...........:  Down
TDM to Eth direction.............: ...........:  Down
Current jitter buffer delay (ms) ........:  -
TDM link status.................................:  Down
Valid Eth packets per sec ................:  Down: 0% of 2000 pps
Handled Eth packets.........................:  0
Handled TDM packets ......................:  0
Late Eth packets ...............................:  0
Underrun Eth packets .......................:  0
Overrun Eth Packets.........................:  0
Invalid sequence Eth Packets ...........:  0
Malformed packets counter ..............:  0
Packets with L bit counter ................:  0
Packets with R bit counter................:  0
Lost Eth packets ...............................:
Duplicate Eth packets.......................:
Jitter maximum level (ms) ...............:  -
Jitter minimum level (ms)  ..............:  -
Peer response to ping.......................:  No
Peer next hop MAC address.......:  00-11-22-33-44-55
```

By monitoring the jitter buffer levels, one can determine the actual packet delay variation (PDV) of the intervening network.

The key parameters are those related to the jitter performance, which are described in Table 46.

Table 46: Reported Jitter Parameters

Parameter	Description
Current Jitter Buffer Delay	The delay represented by the packets currently in the jitter buffer, in milliseconds. This is calculated by multiplying the number of packets times the packet payload length divided by the data rate of the T1/E1 interface
Jitter Minimum Level	The minimum jitter buffer delay seen since the last reset of these statistics, in milliseconds
Jitter Maximum Level	The maximum jitter buffer delay seen since the last reset of these statistics, in milliseconds

Entering "**gs <session name> r**" clears the values in status counters after displaying the current values.

Troubleshooting Guide

Here are a few suggestions to follow if performance problems are experienced with the MG-IP.

1. Check that the Ethernet configuration parameters are correct. Verify that your LAN PHY address is set to 5, and that you WAN PHY is set to off, and 100 Full Duplex.

The following CLI command displays the Ethernet interface configuration for either the WAN or the LAN interface:

```
MG-IP-1:\Config\LAN>gc
                                Running_config      Modified Running_config
Working mode..................... :  ETH                 ETH
Interface Type ................... :  MII                 MII
AutoNeg........................... :  On                  On
Speed (Mb/s) ..................... :  -                   -
Duplex mode ...................... :  -                   -
Flow control ..................... :  Disabled            Disabled
Interface BW (kb/s) ......... :  Unlimited             Unlimited
MAC address...................... :  00-50-C2-15-89-A0   00-50-C2-15-89-A0
MAC loopback..................... :  Disabled            Disabled
PHY configured ................ :  YES                 YES
PHY number ..................... :  5                   5
Advertisement ................... :  10H 10F 100H 100F   10H 10F 100H 100F
IP config mode................... :  Static IP           Static IP
IP address....................... :  169.254.1.100       169.254.1.100
Subnet mask ..................... :  255.255.255.0       255.255.255.0
```

2. Be sure that interface configuration parameters are compatible with the T1/E1 signal sources (line code, line build out, etc.). Verify that you set the TOS priority to 0x5.

The following CLI command displays the TDM over Packet interface configuration for a selected session:

MG-IP-1:\Config\TDM_Over_Packet>gc <**session name**>

	Running_config	Modified Running_config
Session mode ..... :	Enabled	Enabled
Header type..... :	SAToP	SAToP
Local UDP-port/ECID ..... :	2000	2000
Target UDP-port/ECID..... :	2000	2000
IP TOS ..... :	0x5	0x5
Local IP address..... :	169.254.1.100	1.2.3.4
Target IP address ..... :	169.254.1.101	169.254.1.101
Payload length (bytes/frames) ..... :	256/8	256/8
Jitter maximum level (ms) ..... :	5	5
Target MAC..... :	-	-
Layer 2 support mode ..... :	VLAN	VLAN
VLAN enable..... :	Disabled	Disabled
MPLS enable ..... :	(Disabled)	(Disabled)
Transport emulation type ..... :	Unstructured	Unstructured
Session bandwidth (in Kbps) ..... :	2544	2544

The WAN and LAN gs command shows whether the Ethernet links are operational and whether the PHY has connected properly. Check your settings if this status report shows that there are problems.

3. Confirm that the configuration of each MG-IP session is compatible and consistent. At both ends of the session. The TDM over Packet GetStatus (gs) command shows whether there is connectivity with the peer MG-IP and whether the peer is reachable.
4. If the clocking modes on both MG-IP units s are configured as Loopback-Master, make sure that the clock source driving both units is stable. Otherwise, change one of the units to Recovered-Slave. Operating both units as Slave is not recommended and may produce unpredictable results.

Table 47 lists observations and suggested causes and corrections.

Table 47: Observations and Corrections

Observation	Possible cause	Corrections
Jitter overflow and underflow is occurring on both MG-IP unitss	The maximum jitter setting is too low.	Set the maximum jitter to a large value and monitor the minimum and maximum jitter values. Then set the maximum jitter to 2-3 msec more than the difference between the observed maximum and minimum levels.
Wide variation between maximum and minimum jitter levels but no occurrence of jitter overflow or underflow	The jitter buffer is operating correctly. There is variability in the packet network possibly due to congestion.	If the minimum is close to zero or the maximum close to twice the maximum jitter setting, increase the maximum jitter setting to avoid future overflow or underflow.

Appendix A CLI Commands

CLI Command Lookup Matrix

The Command Line Interface (CLI) is discussed in chapter 5. The commands listed in this appendix are presented in alphabetical order based on the full name of the command. The following table presents the commands in alphabetical order based on the command acronym, and then lists the corresponding page in the appendix.

CLI Command Descriptions

AddNewSession

Description Adds a new TDM over Packet application session dynamically.

Abbreviation **adds**

Syntax **adds** <session_name> <session_abbreviation>

Syntax Description

- <session_name>

  A string of 1 to 31 characters defining a session name. The string must be bounded by double quotes if there are any embedded spaces in the session name.

- <session_abbreviation>

  A string of 1 to 4 characters defining an abbreviation for the session name**.**

Defaults

User Guidelines This command is run from \Config\TDM_Over_Packet or \Config\TDM_Over_Packet\SCFG.

The user can define only one session. Before a session can be enabled either a port or time slots of a port must be assigned to the session (using ssp/ssts). Only then can the session be enabled using **sse.**

1. add the session - **adds**
2. assign port(s) - **ssp**
3. enable session. - **sse**

Examples MG-IP-1:\Config\TDM_Over_Packet**> adds Session02 s02**

The request was updated successfully in modified running_config.

Use \c\rp to save the modified running_config

AddRequestManager

Description Adds a community name to the list of those supported by SNMP.

Abbreviation **arm**

Syntax **arm** <mngr_comm_name> <ip_addr> [<permission_level>]

Syntax Descripton

- <mngr_comm_name>

  A string of 1 to 15 characters defining community name. The string must be bounded by double quotes if there are any embedded spaces in the community name.

- <ip_addr>

  The IP address of new request community nn.nn.nn.nn, where nn is a value from 1 to 255.

- <permission_level>

  G or GS. Defines the community as read-only (Get) or read-write (Get-Set).

Defaults permission level defaults to “Get”

User Guidelines The user can define up to fifteen manager communities. The manager ID displayed by the community name is used when the community is to be removed from the list.

Examples MG-IP-1:\Config\SNMP>**arm remote_comm 1.2.3.4 gs**

The request was updated successfully in active ConfigDB

MG-IP-1:\Config\SNMP>**grm**

Mngr ID	Mngr Community name	IP addr	Permission
1	remote_comm	1.2.3.4	get/set

AddTrapManager

Description Adds a manager to the SNMP trap list.

Abbreviation **atm**

Syntax **atm** <manager_community_name> <ip_addr>

Syntax Description

- <manager_community_name>

  A string of 1 to 15 characters defining the Trap manager community name. The string must be bounded by double quotes if there are any embedded spaces in the community name.

- <ip_addr>

  The IP address of new Trap community nn.nn.nn.nn, where nn is a value from 1 to 255

Defaults

User Guidelines MG-IP-1:\Config\SNMP>**atm trap2 10.20.30.40**

The request was updated successfully in active ConfigDB

MG-IP-1:\Config\SNMP>**atm trap3 11.21.31.41**

The request was updated successfully in active ConfigDB

MG-IP-1:\Config\SNMP>**atm trap4 12.22.32.42**

The request was updated successfully in active ConfigDB

MG-IP-1:\Config\SNMP>**atm trap5 13.23.33.43**

The request was updated successfully in active ConfigDB

MG-IP-1:\Config\SNMP>**gtm**

Mngr ID	Mngr Community Name	IP addr
1	Trp Dflt name	10.101.1.200
2	trap2	10.20.30.40
3	trap3	11.21.31.41
4	trap4	12.22.32.42
5	trap5	13.23.33.43

AddUser

Description Adds a new user

Abbreviation **au**

Syntax **au** <user_name> [<user_group> <timeout> <permitted_comm_application>]

Syntax Description

- <user_name>

  A string of 4 to 16 characters, starting with a letter, defining the user name.

- <user_group>

  The possible values are: Viewer, Oper, and Admin.

- <timeout>

  The inactivity timeout, in minutes, for this user. The possible values are: -1 (no timeout), or a number from 1 to 2147483647.

- <permitted_comm_application>

  The connections the user may use to log in to the system. Possible values are UART (CONSOLE only) or ALL

Defaults user group default: Viewer.

timeout default: 10 minutes

permitted connections default: all

User Guidelines

Examples MG-IP-1:\Admin\Users>**au david viewer 600 all**

The command completed successfully.

Use \c\rp to save the modified running_config

ApplyChanges	
Description	This command allow dynamic changes of ethernet MAC layer configuration
Abbreviation	**ac**
Syntax	Config\WAN\ac \Config\LAN\ac
Syntax Description	
Defaults	
User Guidelines	All sessions must be disabled before using this command.
Examples	MG-IP-4:\Config\LAN>ac The command completed successfully. MG-IP-4:\Config\WAN>ac Cannot apply changes since there are enabled sessions. Use "\c\top\ssd all" to disable the sessions.

Bert

Description Bert generator configuration.

Abbreviation **b**

Syntax b <action> <TDM port> [<pattern>] [<period>] [<direction>] [<list of time slots>]

Syntax Description

- <action: {stop|start}>
- <TDM port: {P1,All}>
- [<pattern: {qrss}>]
- [<period: in minutes, 0 for infinity>]
- [<direction: {Tdm|Eth}>]
- [<list of time slots: separated by a space or a range separated by a "-", e.g. 1 3 47-10>]

Defaults

User Guidelines The bit error rate test (BERT) command causes the MG-IP to generate a quasirandom pattern and send it in the direction of the TDM port. The pattern can be limited to a selection of time slots within the port. If the target equipment is set to loop back the received pattern, the MG-IP will check for errors in this pattern. The command is used to both start and stop the bert test. The gbs command is used to display the results of the test.

Examples **\d\d\b start p1 qrss 5 tdm**

Bert test started

\d\d\b stop p1

Bert test stopped

CalibrateJitter

Description Moves the operating point of the jitter buffer for a selected session closer to the maximum jitter setting.

Abbreviation **clib**

Syntax **clib** <session_name_or_abbreviation> [<r>]

Syntax Description

- <session_name_or_abbreviation>

  A defined session name or abbreviation.

- [<reset-calibration: {r}>]

Defaults

User Guidelines When the current jitter shown on the TDM over Packet application is at a value that is much higher or much lower than the maximum jitter defined for the session, then a jitter overrun or underrun is more likely to happen, especially if the PDV of the packet network is relatively high. The clib command moves the current jitter closer to the maximum jitter setting. The change occurs over a period of up to ten seconds, with filler packets or dropped packets used to adjust the jitter buffer position.

Examples MG-IP-1:\Config\TDM_Over_Packet>**clib s01 Jitter calibration done**

ChangePassword

Description	Changes a user's password.
Abbreviation	**cp**
Syntax	**cp** [<user_name>]
Syntax Description	▪ <user_name> The name of the user whose password you want to change.
Defaults	The default user is the user running the command.
User Guidelines	Administrator privileges are required to change another user's password. After you enter the command, the CLI prompts you for the new password. Note that the passwords are not echoed on your screen as you enter them.
Examples	MG-IP-1:\Admin\Users>**cp david** Administrator password: New Password: Confirm New Password: The command completed successfully.

ConfigHeaderCESoETH

Description Configures CES over Ethernet session header.

Abbreviation **shce**

Syntax shce <session name:> <Target MAC address> [<local ECID>] [<peer ECID>] [<OobSig local ECID>] [<OobSig target ECID>]

Syntax Description

- <session name or abbreviation/all:

  (name is up to 31 chars, abbreviation is up to 4 chars)>
- <Peer MAC address: (xx-xx-xx-xx-xx-xx) - hex digits>
- [<local ECID: (0x0-0xFFFFF)>]
- [<Peer ECID: (0x0-0xFFFFF)>]
- [<OobSig local ECID: (0x0-0xFFFFF)>]
- [<OobSig target ECID: (0x0-0xFFFFF)>]

Defaults Session name: no default

Peer MAC: no default

Local ECID: 0x20 for first session. This value is increased for each session added.

Peer ECID: 0x20 for first session. This value is increased for each session added.

OobSig local ECID: 0x22 for first session. This value is increased for each session added.

OobSig peer ECID: 0x22 for first session. This value is increased for each session added.

User Guidelines

Examples MG-IP-1:\Config\TDM_Over_Packet**Session_config>shce s01 99-88-77-66-55-44**

The request was updated successfully in modified running_config.

ConfigHeaderSAT/CESoP

Description Sets the TDM over Packet application CES header format to the SATOP or CESOP format.

Abbreviation **shsc**

Syntax **shsc** ALL | <session_name_or_abbreviation> [<target_port>] [<local_port>]

Syntax Description

- ALL | <session_name_or_abbreviation>

  ALL changes the header type for all sessions.

  Otherwise, the indicated session is changed.

- <peer-port>

  The number of the destination port, from 2000 to 65535.

- <local_port>

  The number of the local port, from 2000 to 65535.

< Local-OobSig-port>

The number of the separated OOS signaling pseudowire port 2000-65535>

< peer-OobSig-port>

The number of the separated OOS signaling pseudowire port 2000-65535>

Defaults The default port number (both target and local) is 2000.

User Guidelines Use the SATOP (unstructured) or CESOP (structured) headers when the CES packets must be routed or the network policy requires these standards. The paired unit must be configured with the same header and with compatible UDP port numbers.

Examples MG-IP-1:\Config\TDM_Over_Packet>**shsc all**

The request was updated successfully in modified running_config.

MG-IP-1:\Config\TDM_Over_Packet>**shsc all**

MG-IP-4:\Config\TDM_Over_Packet\Session_config> shsc s01 2000 2001 2002 2003

The request was updated successfully in modified running_config.

Use \c\rp to save the modified running_config

Activate the modified sessions by disabling (ssd) then enabling them (sse) or perform replace and reload (\c\rr)

ConfigSesTargetIP

Description Configures Target IP address of the session.

Abbreviation **ccip**

Syntax **ccip** <session name> <ip-address> [<ip-tos><OobSig-ip-tos]

Syntax Description

- <session name or abbreviation:

(name is up to 31 chars, abbreviation is up to 4 chars)>

- <ip-address: (IP1.IP2.IP3.IP4)>
- [<ip-tos: (0x0-0xFF)>]

<OobSig-ip-tos”> - Tos of OOS separated pseudowire

- range allowed: 0-0xFF
- mode: optional parameter
- default: 0

Defaults

User Guidelines

Examples MG-IP-4:\Config\TDM_Over_Packet\Session_config> ccip s01 1.2.3.4 0x0 0x10

The request was updated successfully in modified running_config.

Use \c\rp to save the modified running_config

Activate the modified sessions by disabling (ssd) then enabling them (sse) or perform replace and reload (\c\rr)

ConnectClockToSession

Description Connect Clock to Pseudowire Session

Abbreviation **ccts**

Syntax **ccts** <Clock Name> <Session Name>

Syntax Description <Clock Name>:

- pri (primary)
- sec (secondary)

<Session Name>: The pseudowire session name to connect to the clock

Defaults

User Guidelines Session must be disabled; works only in recovery clock mode

Examples MG-IP-4:\c\clk ccts pri sso1

DeleteUser

Description	Deletes a user from the list of defined users.
Abbreviation	du
Syntax	du <user_name>
Syntax Description	▪ <user_name> An existing user.
Defaults	
User Guidelines	Only a user in the admin group can perform this function.
Examples	MG-IP-1:\Admin\Users>**du fred** The command completed successfully. Use \c\rp to save the modified running_config

DownLoadFile

Description

Automatically download CLI script file or TLV file using the TFTP protocol.

Automatically download image file using TFTP protocl when an IP interface is configured to DHCP mode.

Abbreviation **dlf**

Syntax

\admin\dlf <IP> cfg <file path>

\admin\dlf <IP> img <file path>[<force>]

Syntax Description

Mandatory parameters:

- TFTP server IP address
- Downloaded file type – image/configuration file
- File path – a string no longer than 70 characters. The file path includes the file name, which must have a TXT extension for CLI script files.

Optional parameter:

- Force – indicates whether the given filename should be compared to the saved filename of the image, and can determine whether a download is performed in any case or only if they differ (this only applies to the software image file)

Defaults

User Guidelines

This CLI allows firmware/configuration data to be downloaded to the target. This mechanism is applicable mainly to customers using the module in standalone mode, or when using the module on an evaluation platform.

This command can be used to download:

- Configuration - CLI script files/TLV configuration files
- Image files. This is only applicable when the safe dowanload (UDL) option is used (note that all standalone-purpose modules are produced and released with the UDL option)

See Automatic Management and Provisioning on page 60 for more details.

Examples

\admin\dlf 169.254.1.1 img MG-IP-1-R03.02.00_D001.zip

ForceUserLogout

Description Forces logout of a currently active user session.

Abbreviation **ful**

Syntax **ful** <user_name> [<user_comm_id>]

Syntax Description

- <user_name>

  The existing user to log out.

- <user_comm_id>

  The ID of the user, as displayed by the GetActiveUsers (gau) command.

Defaults If the user comm ID is not entered, all current users with the same user name will be logged out.

User Guidelines User sessions include CLI sessions, both via the CONSOLE, Telnet, and, where available, host-to-host (RCP) sessions. In the following example, two sessions using the user name "admin" are active. They will both be logged off, since the user comm ID is not specified.

Examples

```
MG-IP-1:\Admin\Users>gau
UserName        Comm Id     Group     Timeout   TimeLeft
Active users:
admin           13          Admin     -1        -1
admin *         14          Admin     -1        -1
MG-IP-1:\Admin\Users>ful admin
All matching user(s) were forced-logout
MG-IP-1:\Admin\Users>
You are logged out
```

FunctionalTest

Description Starts an internal self-test that runs continuously or for a defined duration.

Abbreviation **fts**

Syntax **fts** [<time>]

Syntax Description

- <time>

  The number of iterations, at one iteration per second, from 0 to 65535. 0 indicates continuous operation.

Defaults The default is 10 iterations.

User Guidelines This test exercises the MG-IP by routing traffic through all the device interfaces and checking for correct performance. The command performs a device reset, both before and after the test.

The following setup must be done for the function to operate successfully:

- Connect the LAN interface to the WAN interface.
- Connect an external loopback connector to the T1/E1 connector.

While the command is running, the MG-IP's SYS OK LED displays the status:

- Alternating red/green indicates the test is proceeding without error.
- Flashing red indicates the test has detected a failure.

If the test was set to run continuously or for a long interval, the user can cycle the power to stop the test. When the test completes, the device is reset and the version string is sent to the CONSOLE. The second example below was run with no loopback set.

Examples MG-IP-1:\Diagnostics>**fts 2**

Self test will start for 2 seconds.

Board Test: successful iteration: 0

Board Test: successful iteration: 1

Board Test: ENDED SUCCESSFULLY

MG-IP-1 RXX.XX.XX_DXXX-XX

MG-IP-1:\Diagnostics>**fts 2**

Board Test: successful iteration: 0

Failed interface: 2, in-frames=0, frames-discards=0, bytesdiscards= 0

**** SELF TEST FAILED **** (continue scan) : 1

Board Test: TEST FAILED!!!!!!!:

MG-IP-1 RXX.XX.XX_DXXX-XX

GetActiveUsers

Description List all users with currently active login sessions.

Abbreviation **gau**

Syntax **gau**

Syntax Description

Defaults

User Guidelines The function lists all active user sessions, including their:

- Session communications ID, which is used by the ForceUserLogout (ful) command
- User group
- User timeout length
- The time remaining until automatic log out.

An asterisk next to the user name indicates the current user.

Examples

MG-IP-1:\Admin\Users>**gau**

UserName	Comm Id	Group	Timeout	TimeLeft
Active users				
admin *	19	Admin	-1	-1
superuser	20	Admin	-1	-1
view	22	Viewer	-1	-1

GetBertStatus

Description Get Bert status.

Abbreviation **gbs**

Syntax **gbs** <TDM port>

Syntax Description <TDM port: {P1}>

Defaults

User Guidelines

Examples **\d\d\gbs p1**

Item	Value/Status
Port ..... :	P1
Pattern..... :	qrss
Test mode ..... :	Full
Direction ..... :	TDM
Total test length [minutes] ..... :	20
Test status in last second..... :	Problem
Test status since last reset ..... :	Problem
Test state ..... :	Finished
Finish date ..... :	16 Jan 1970
Finish time ..... :	00:40:41 250 ms
Sync ..... :	Off
Total minutes elapsed ..... :	0
Total seconds elapsed ..... :	17
Minutes since last resync ..... :	0
Seconds since last resync..... :	0
Re-sync occurred ..... :	0
Total bit error ratio ..... :	Not Measured
Errors since last sync [bit] ..... :	0
Error rate since last sync [b/s] ..... :	Not Measured

GetBoardData

Description Displays information about the MG-IP's internal circuit board configuration.

Abbreviation **gbd**

Syntax **gbd**

Syntax Description

Defaults

User Guidelines

Examples

```
MG-IP-1:\Admin>gbd
                          Board information
Card type .............:  7 (7) +
CPLD version ......:  0
FLASH data.........:  FUJITSU (0x22f9, 0x0, 0x19)
DRAM size..........:  64 MB
SW checksum ......:  0x88e0d1e8
FPGA id...............:  0x1
FPGA version ......:  0x2
```

GetCLIPrompt

Description Displays the CLI prompt as currently set in both the startup and modified configuration databases.

Abbreviation **gcp**

Syntax **gcp**

Syntax Description

Defaults

User Guidelines

Examples MG-IP-1:\Config\General>**scp SuperUnit**

The request was updated successfully in startup-config.

```
MG-IP-1:\Config\General>gcp
                         Running_config   Modified Running_con
CLI prompt.........:     MG-IP-1          SuperUnit
```

GetClockStatus	
Description	This command gets the status of the adaptive clock recovery status
Abbreviation	**gcs**
Syntax	\Config\clk
Syntax Description	gcs <clock name:> [R] [V] ▪ [R] (reset holdover timer)] ▪ [V] Verbose Clock name – primary or secondary
Defaults	
User Guidelines	Output: Clock mode. (The current state in the state-machine). Frequency. (The last output frequency of RCR). If [V] is received: Time in holdover. (Sum of the time machine was in HO since last reset). Holdover triggers (Histogram of reasons RCR went to HO since last reset).
Examples	MG-IP-4:\Config\clk>gcs prim v Item Value/Status Clock mode.....: HOLDOVER (Qualificat Frequency.....: 2048002.89130697 Time in holdover.....: 2:26:6 Holdover triggers [L-D-R-Q].....: 0-2-0-133 L = Number of triggers due to “L_BIT” D = Number of triggers due to “Link Disconnect” R = Number of triggers due to “Packet reorder” (Disabled) Q = Number of triggers due to “Quality detector” (HO2)

GetConfig

Description Displays configuration information about an interface or an application.

Abbreviation **gc**

Syntax **gc**

TDM over Packet only:

gc <session name or abbreviation> [<v for verbose>]

Syntax Description TDM over Packet only:

- <session name or abbreviation>

  name is up to 31 chars, abbreviation is up to 4 chars)>

- [<v for verbose>]

Defaults

User Guidelines This command displays different information based on the sub-directory from which the command was run.

Examples **T1/E1 (bitstream) configuration information:**

MG-IP-1:\Config\E1>**gc**

	Running_config	Mod. Running_config
Working mode ..... :	Bitstream	Bitstream
LIU line format ..... :	E1	E1
Frame size (bytes) ..... :	516	516
Underrun value ..... :	0xFE	0xFE
Clocking mode..... :	Internal-maste	Internal-master
Tx clock polarity..... :	Rising	Rising
Rx clock polarity..... :	Falling	Falling
Port 1 state ..... :	Enabled	Enabled
Active Profile..... :	Profile_1	Profile_1

LAN or WAN configuration information:

MG-IP-1:\Config\WAN>**gc**

	Running_config	Mod. Running_config
Working mode .....:	ETH	ETH
Interface Type.....:	MII	MII
AutoNeg.....:	On	On
Speed (Mb/s) .....:	-	-
Duplex mode.....:	-	-
Flow control.....:	Disabled	Disabled
Interface BW (kb/s) .....:	Unlimited	Unlimited
MAC address .....:	00-50-C2-15-89-A0	00-50-C2-15-89-A0
MAC loopback.....:	Disabled	Disabled
PHY configured.....:	Yes	Yes
PHY number.....:	0	0
Advertisement.....:	10H 10F 100H 100F	10H 10F 100H 100F
IP config mode.....:	Static IP	Static IP
IP address.....:	169.254.1.5	169.254.1.5
Subnet mask.....:	255.255.255.0	255.255.255.0

Port configuration information:

MG-IP-1:\Config\E1\Port_1>**gc**

	Running_config	Mod. Running_config
Port 1 state .....:	Disabled	Disabled
Active Profile.....:	Profile_1	Profile_
LIU line format.....:	E1	E1
LIU type.....:	DS21Q55	DS21Q55
LIU line code.....:	HDB3	HDB3
LIU line build out .....:	E1_120	E1_120
LIU Rx term.....:	120ohm	120ohm
LIU monitor gain .....:	Norm	Norm
LIU Rx equalizer gain limit ..:	Short	Short
LIU jitter attenuation .....:	Rx-path	Rx-path
LIU loopback.....:	Disabled	Disabled
Framed mode .....:	Framed	Framed
Frame format .....:	-	PCM31
Channel bandwidth .....:	-	64K

TDM signaling type.....:	-	OOSF

Profile configuration information:

MG-IP-1:\Config\E1\Profile_1>**gc**

	Running_config	Mod. Running_config
LIU type..... :	DS21458	DS21458
LIU line code ..... :	HDB3	AMI
LIU line build out ..... :	E1_75	E1_75
LIU Rx term..... :	120ohm	120ohm
LIU monitor gain ..... :	Norm	Norm
LIU Rx equalizer gain limit ... :	Short	Short
LIU jitter attenuation ..... :	Rx-path	Rx-path

CONSOLE configuration information:

MG-IP-1:\Config\CONSOLE>**gc**

	Running_config	Mod. Running_config
Baud rate.....:	115200	115200
Stop bit.....:	1	1
Protocol.....:	Term	Term
Mode.....:	Enabled	Enabled

TDM Over Packet application configuration information:

MG-IP-1:\Config\TDM_Over_Packet>**gc s01**

	Running_config	Mod. Running_config
Session mode .....:	Disabled	Disabled
Header type.....:	-	CESoPSN
Local UDP-port/ECID .....:	-	2000
Target UDP-port/ECID.....:	-	2000
Local OOS UDP-port/ECID .....:	-	(2000)
Target OOS UDP-port/ECID.....:	-	(2000)
IP TOS .....:	-	0x0
Local IP address.....:	-	169.254.1.100
Target IP address .....:	-	169.254.1.101
Payload length (bytes/frames) ...:	-	620/20
Jitter maximum level (ms) .....:	-	200
Target MAC.....:	-	-
Layer 2 support mode .....:	-	VLAN

VLAN enable.....:	-	Disabled
MPLS enable .....:	-	(Disabled)
Transport emulation type.....:	-	Structured
LOPS-Policy.....:	-	Idle
L-Flag-Policy.....:	-	Idle
R-Flag-Policy.....:	-	None
RD-Policy.....:	-	None
Idle-Pattern.....:	-	0xFF
SigIdle-Pattern.....:	-	0x0

TDM Over Packet application Session configuration information:

MG-IP-1:\Config\TDM_Over_Packet\Session_config>**gc s01**

	Running_config	Mod. Running_config
Session mode .....:	Enabled	Enabled
Header type.....:	SAToP	SAToP
Local UDP-port/ECID .....:	2000	2000
Peer UDP-port/ECID .....:	2000	2000
Local OobSig.....:	2000	2000
Peer OobSig.....:	2000	2000
IP TOS .....:	0x0	0x0
OobSig TOS.....:	-	0x0
Local IP address.....:	169.254.1.100	169.254.1.100
Target IP address .....:	169.254.1.101	10.20.30.40
Payload length (bytes/frames) ...:	640/20	620/20
Jitter maximum level (ms) .....:	200	200
Peer MAC.....:	-	-
Layer 2 support mode .....:	VLAN	VLAN
VLAN enable.....:	Disabled	Disabled
VLAN ID.....:	0	-
VLAN priority .....:	-	0
OobSig VLAN priority .....:	0	-
MPLS enable .....:	(Disabled)	(Enabled)
Transport emulation type.....:	Unstructured	Unstructured
Session bandwidth (in Kbps) .....:	2032	2032

TDM alarm and error reporting policy configuration

MG-IP-4:\Config\TDM_Over_Packet\Policy>gc

	Mod. Running_config
LOPS-Policy.....:	Idle
L-Flag-Policy.....:	Idle

R-Flag-Policy.....: None

RD-Policy.....: None

Idle-Pattern.....: 0xFF

SigIdle-Pattern.....: 0x0

Syslog server status

\Monitor\General\Syslog gc

activation: enabled

Server ID	IP address	port
1	169.254.121.200	514
2	na	na
3	169.254.121.121	514

Clock configuration

MG-IP-4:\c\clk gc

Output:

Clock Mode.....: Recovery

External Clock Rate.....: 2048

Ext Clock Direction.....: input

Active Clock.....: Primary Clock

Primary PW.....: Session01

Secondary PW.....: Disconnected

GetConfigDBStatus

Description Displays information about the parameter database.

Abbreviation **gcds**

Syntax **gcds**

Syntax Description

Defaults

User Guidelines This command is used by technical support when analyzing user requests or problems. An asterisk on the "Original Version" line indicates that the parameters have been changed in the database since the original update.

Examples

```
MG-IP-1:\Admin>gcds
Internal DB name:                Aarb1c4d0e0f
Customer DB name ..........:     CMS-1601
CLI prompt ........................:  MG-IP-1
(Original version)  .............:  1.0.1*
Current version ..................:  1.0.1
Customer serial num...  ......:  -
Validity ..............................:  Yes
Max available size....:          65536
Current size.......................:  4280
Model template ..................:  R1601ETEA1000
Master model template ......:  R1601ETEA1000
```

GetConfigIfs

Description Displays the configuration of all three traffic interfaces.

Abbreviation **gci**

Syntax **gci**

Syntax Description

Defaults

User Guidelines

Examples MG-IP-1:\Config>**gci**

LAN interface configuration

	Running_config	Mod. Running_config
Working mode ..... :	ETH	ETH
AutoNeg ..... :	On	On
Speed (Mb/s) ..... :	-	-
Duplex mode ..... :	-	-
Interface BW (kb/s) ..... :	Unlimited	Unlimited
MAC address ..... :	00-13-24-57-62-F4	00-13-24-57-62-F4
IP config mode..... :	Static IP	Static IP
IP address..... :	169.254.1.100	169.254.1.100
Subnet mask..... :	255.255.255.0	255.255.255.0

E1 interface configuration

	Running_config	Mod. Running_config
Working mode ..... :	Bitstream	Bitstream
LIU line format..... :	E1	E1
Clocking mode..... :	Loopback-maste	Loopback-maste
Port 1 state ..... :	Enabled	Enabled
Active Profile..... :	Profile_1	Profile_1

WAN interface configuration

	Running_config	Mod. Running_config
Working mode ..... :	ETH	ETH
AutoNeg ..... :	On	On
Speed (Mb/s) ..... :	-	-
Duplex mode ..... :	-	-
Interface BW (kb/s) ..... :	Unlimited	Unlimited
MAC address ..... :	00-13-24-57-62-F3	00-13-24-57-62-F3
IP config mode..... :	Static IP	Static IP
IP address..... :	169.254.1.100	169.254.1.100
Subnet mask..... :	255.255.255.0	255.255.255.0

GetConfigUarts

Description Displays the CONSOLE configuration.

Abbreviation **gcu**

Syntax **gcu**

Syntax Description

Defaults

User Guidelines

Examples MG-IP-1:\Config>**gcu**

CONS configuration

	Running_config	Mod. Running_config
Baud rate.....:	115200	115200
Stop bit.....:	1	1
Protocol.....:	Term	Term
Mode.....:	Enabled	Enabled

GetDateTime

Description	Displays the current date and time.
Abbreviation	**gdt**
Syntax	**gdt**
Syntax Description	
Defaults	
User Guidelines	
Examples	MG-IP-1:\Admin>**gdt** Current date: 25 Jun 2005 Current time: 11:55:58 System uptime: 0 days, 05:29:15 (550 ms)

GetDefGateway

Description Displays the default Gateway IP address.

Abbreviation **gdg**

Syntax **gdg**

Syntax Description

Defaults

User Guidelines

Examples

```
MG-IP-1:\Config\General>gdg
                                Running_config   Mod. Running_config
Default gateway IP addr:        10.101.1.1       50.45.123.1
```

GetFirmwareStatus

Description Displays status information about the firmware.

Abbreviation **gfs**

Syntax **gfs**

Syntax Description

Defaults

User Guidelines This information is useful for technical support.

Examples

```
MG-IP-1:\Admin>gfs
Current version ....:    R03.01.00_D012
Internal version....:    AeGf1g6h1i4j
SW Checksum .....:    0x1AEED028
```

GetGlobalConfig

Description Get global configuration

Abbreviation **ggc**

Syntax **ggc**

Syntax Description

Defaults no defaults

User Guidelines This displays the structured status of all the ports, the Layer2 support mode.

Examples

MG-IP-1:\Config\TDM_Over_Packet>**ggc**

	Running_config	Mod. Running_config
Layer 2 support.....:	VLAN	VLAN
Transport emulation type P1....:	Disabled Unstructured	Disabled Structured
Total pps of all sessions.....:	0	1000
Enabledsessions bw (Kbps)....:	0	0
Disabledsessions bw (Kbps)...:	0	2032

GetGlobalStatus	
Description	This command displays global MG-IP global, including the following: ▪ WAN status ▪ LAN status ▪ TDM status ▪ Session status
Abbreviation	**ggs**
Syntax	MG-IP-4:\Config\General>ggs
Syntax Description	ggs
Defaults	NA
User Guidelines	Show: ▪ Adminstration status ▪ TDM status ▪ Session status
Examples	:\Config\General>ggs Internal DB name.....: Aarb1c4d0e0f Customer DB name.....: CES Module CLI prompt.....: MG-IP-4 (Original version)....: 3.3.0 Current version.....: 3.3.0 Customer serial num...: - Validity.....: Yes Max available size....: 65536 Current size.....: 5760 Model template.....: R1604ETEA1000 Master model template.: R1604ETEA1000 LAN interface configuration T1 interface configuration link status.....: Port1 Port2 Port3 Port4 ---------- Link.....: DOWN DOWN DOWN DOWN LIU loopback.....: Disable Disable Disable Disable LIU database loopback...: Disable Disable Disable Disable TDM Tx Clock Source.....: internal internal internal internal dsx1NoAlarm.....: - - - - dsx1RcvFarEndLOF.....: - - - - dsx1RcvAIS.....: - - - - dsx1XmtAIS.....: - - - -

```
dsx1LossOfFrame.........:  -        -        -        -
dsx1LossOfSignal........:  los      los      los      los
dsx1LoopbackState.......:  -        -        -        -
dsx1RcvFarEndLOMF.......:  -        -        -        -
dsx1XmtFarEndLOMF.......:  -        -        -        -


WAN interface configuration



CONS configuration

Running_config                      Modified Running_config

Baud rate..........:  115200        115200
Stop bit...........:  1             1
Protocol...........:  Term          Term
Mode...............:  Enabled       Enabled


IP data mib2 statistics
Num of IP forwarding....................:  2
Num of IP time to live..................:  64
Num of IP in received...................:  12803696
Num of IP in header errors..............:  0
Num of IP in address errors.............:  0
Num of IP forward datagrams.............:  0
Num of IP in unknown protocols..........:  0
Num of IP in discards...................:  0
Num of IP in delivers...................:  12802413
Num of IP out requests..................:  38518689
Num of IP out discards..................:  0
Num of IP out discards do routes........:  0
Num of IP out discards do routes........:  0
Num of IP reassembly Timeout............:  60
Num of IP reassembly Required...........:  0
Num of IP reassembly Required...........:  0
Num of IP reassembly OKs................:  0
Num of IP reassembly fails..............:  0
Num of IP fragment OKs..................:  0
Num of IP fragment Fails................:  0
Num of IP fragment creates..............:  0
Num of IP routing discards..............:  0


Running configuration

TimeSlot#                   00---0----1----1----2---2
                            01---5----0----5----0---4

Port 1                      fXXXXX--------------------

Port 2                      f------------------------

Port 3                       ------------------------

Port 4                      f------------------------
```

	Modified configuration TimeSlot# 00---0----1----1----2---2 01---5----0----5----0---4 Port 1 fXXXXX---------- Port 2 f---------- Port 3 ---------- Port 4 f---------- Session s01 Status Item Status/Value Clocking mode.....: Internal-master Eth to TDM direction.....: Down TDM to Eth direction.....: Down Current jitter buffer delay (ms): - TDM link status.....: Down Valid Eth packets per sec.....: Down: 100% of 1000 p Handled Eth packets.....: 0 Handled TDM packets.....: 12839578 Late Eth packets.....: 0 Underrun Eth packets.....: 0 Overrun Eth Packets.....: 0 Invalid sequence Eth Packets....: 0 Malformed packets counter.....: 0 Packets with L bit counter.....: 12801365 Packets with R bit counter.....: 67 Lost Eth packets.....: - Duplicate Eth packets.....: - Jitter maximum level (ms).....: - Jitter minimum level (ms).....: - Peer response to ping.....: Yes Peer next hop MAC address.....: 00-12-34-56-78-90

GetInitDnldStatus

Description Get the status of configuration file download process on init.

Abbreviation **gids**

Syntax **gids**

Syntax Description

Defaults no defaults

User Guidelines

Examples

```
MG-IP-1:\Admin >gids
Status of file download on init
Configuration filename...:      -
File download status.....:      No file download process

MG-IP-1:\Admin >gids
Status of file download on init
Configuration filename...:      config.txt
File download status.....:      Configuration file process succeeded

MG-IP-1:\Admin >gids
Status of file download on init
Configuration filename...:      config.txt
File download status.....:      Configuration file process failed
```

GetMacAddress

Description Displays the WAN and LAN MAC address.

Abbreviation **gma**

Syntax **gma**

Syntax Description

Defaults

User Guidelines The LAN MAC address will be one digit incrementally higher than the WAN MAC address.

Examples

```
MG-IP-1:\Config\General>gma
Current MAC Address for WAN interface...:   00-50-C2-15-03-0A
Current MAC Address for LAN interface..:    00-50-C2-15-03-0B
MAC Address for WAN interface in flash..:   00-50-C2-15-03-0A
MAC Address for LAN interface in flash.:    00-50-C2-15-03-0B
```

GetModifiedConfigPorts

Description Displays the T1/E1 configuration currently stored in the modified running configuration.

Abbreviation **gmcp**

Syntax **gmcp**

Syntax Description

Defaults

User Guidelines

Examples

```
MG-IP-1:\Config\E1>gmcp
Modified Running_config ..... :  Port1
port state ..................... :  Enabled
Active Profile.................. :  Profile_
LIU line format................. :  E1
LIU type........................ :  DS21458
LIU line code................... :  HDB3
LIU line build out ............. :  E1_75
LIU Rx term .................... :  120ohm
LIU monitor gain ............... :  Norm
LIU Rx equalizer gain limit..... :  Short
LIU jitter attenuation ......... :  Rx-path
LIU loopback.................... :  Disabled
Framed mode .................... :  Framed
Frame format ................... :  PCM31
Channel bandwidth............... :  64K
TDM signaling type.............. :  OOSF
```

GetRequestManagers

Description Displays a list of the SNMP request managers (communities) and their IDs.

Abbreviation **grm**

Syntax **grm**

Syntax Description

Defaults

User Guidelines

Examples MG-IP-1:\Config\SNMP>**grm**

Mngr ID	Mngr Community name	IP addr	Permission
1	public	169.254.1.200	get

GetRequestTrapPorts

Description Displays the SNMP request port and Trap port.

Abbreviation **gp**

Syntax **gp**

Syntax Description

Defaults

User Guidelines

Examples

```
MG-IP-1:\Config\SNMP>gp
                          Running_config   Mod. Running_config
Request port.........:    161              2000
Trap port ...........:    162              162
```

GetRunningConfigPorts

Description Displays the configuration of the T1/E1 ports in the running configuration.

Abbreviation **grcp**

Syntax **grcp**

Syntax Description

Defaults

User Guidelines

Examples

```
MG-IP-1:\Config\E1>grcp
Running_config ..............................: Port1
port state ..................................: Enabled
Active Profile...............................: Profile_
LIU line format..............................: E1
LIU type.....................................: DS21458
LIU line code................................: HDB3
LIU line build out ..........................: E1_75
LIU Rx term .................................: 120ohm
LIU monitor gain ............................: Norm
LIU Rx equalizer gain limit..................: Short
LIU jitter attenuation ......................: Rx-path
LIU loopback.................................: Disabled
LIU database loopback .......................: Disabled
Framed mode .................................: Unframed
Channel bandwidth............................: -
TDM signaling type...........................: -
```

GetSessionTimeSlots

Description Displays timeslots selected for a session.

Abbreviation **gsts**

Syntax **gsts** <session_name_or_abbreviation>

Syntax Description

- <session_name_or_abbreviation>

  The session for which to display timeslot information.

Defaults

User Guidelines

X : time slot is selected

- : Not selected

* : Not applicable

F : framing information in-stream

f : framing information out-of-stream

S : signaling information in-stream

s : signaling information out-of-stream

Examples

```
MG-IP-1:\Config\TDM_Over_Packet>gsts s01
Running Configuration of s01 session
TimeSlot#   0----0----1----1----2----2----3-
            0----5----0----5----0----5----0-
Port 1      FXXXXXXXXXXXXXXXXXXXXXXXXXXXXXX
Modified Configuration of s01 session
TimeSlot#   0----0----1----1----2----2----3-
            0----5----0----5----0----5----0-
Port 1      FXXXXXXXXXXXXXXXXXXXXXXXXXXXXXX
```

GetSnmpStatistics

Description Displays MIB2 statistics for the selected interface.

Abbreviation **gss** <type> or

gss [<interval number>]| <r - reset counters>]

Syntax WAN or LAN:

gss <type>

TDM - gss [<interval number: (1-95) or 0 for the current interval>]

Syntax Description For WAN or LAN:

<type>

Possible values are: I (IP statistics), T (TCP statistics), U (UDP statistics), or C (ICMP statistics).

For TDM:

- [<interval number: (1-96) or 0 for the current interval>]

[<r - reset counters>] – reset PM counters

Defaults

Examples

```
MG-IP-1:\Config\snmp>gss i
Ip data mib2 statistics
Num of Ip forwarding..................................... :  2
Num of Ip Time to live................................... :  64
Num of Ip in received.................................... :  5
Num of Ip in Header Errors............................... :  0
Num of Ip in Address Errors ............................. :  0
Num of Ip Forward Datagrams.............................. :  0
Num of Ip in Unknown Protocols........................... :  0
Num of Ip in Discards.................................... :  0
Num of Ip in Delivers.................................... :  5
Num of Ip out Requests................................... :  1489
Num of Ip out Discards................................... :  0
Num of Ip out Discards do Routes......................... :  0
Num of Ip out Discards do Routes......................... :  0
Num of Ip Reassembly Timeout............................. :  60
Num of Ip Reassembly Required............................ :  0
Num of Ip Reassembly Required............................ :  0
Num of Ip Reassembly OKs................................. :  0
Num of Ip Reassembly Fails............................... :  0
Num of Ip Fragment OKs................................... :  0
Num of Ip Fragment Fails................................. :  0
```

```
Num of Ip Fragment Creates ..........................: 0
Num of Ip Routing Discards..........................: 0

MG-IP-1:\Config\snmp>gss t
Tcp data mib2 statistics
Tcp retransmitting algorithm.........................: Unknown type
Num of TCP retransmitting min timeout........: 0
Num of TCP retransmitting max timeout .......: 0
Num of TCP max tcp connection ...................: 0
Num of TCP active open connections ..........: 2
Num of TCP passive open connections..........: 1
Num of TCP attempt failes...........................: 1
Num of TCP closed state from establised.......: 0
Num of TCP current extablish or close w.......: 0
Num of TCP In segments received.................: 5
Num of TCP Out segments received .............: 7
Num of TCP segment retransmitted .............: 0
Num of Tcp received in error .......................: 0
Num of Tcp sent contain RST flag................: 1

Tcp data mib2 connections
Tcp connction state.....................................: established
Tcp Local ip addr connection .......................: 0x7f000001
Tcp Local port connection...........................: 0x60b
Tcp Remote ip addr connection.....................: 0x7f000001
Tcp Remote tcp connection ..........................: 0x5e9e

Tcp connction state.....................................: established
Tcp Local ip addr connection .......................: 0x7f000001
Tcp Local port connection...........................: 0x5e9e
Tcp Remote ip addr connection.....................: 0x7f000001
Tcp Remote tcp connection ..........................: 0x60b

MG-IP-1:\Config\snmp>gss u
Udp data mib2 statistics
Num of in Udp datagram..............................: 0
Num of in Udp datagram no port...................: 0
Num of in Udp datagram not delivered..  ......: 0
Num of out Udp datagram not delivered .......: 2
```

```
Udp data mib2 connections
Udp Local ip addr connection.......................:    0x0
Udp Local port connection .........................:    0xa1

Udp Local ip addr connection.......................:    0x0
Udp Local port connection .........................:    0x835

Udp Local ip addr connection.......................:    0x7f000001
Udp Local port connection .........................:    0x5e9e

Udp Local ip addr connection.......................:    0xa9fe0164
Udp Local port connection .........................:    0x7d0

MG-IP-1:\Config\snmp>gss c
Icmp data mib2 statistics
Num of ICMP in messages............................:    0
Num of ICMP in Errors..............................:    0
Num of ICMP in Dest unreachables...................:    0
Num of ICMP in time exceeded.......................:    0
Num of ICMP in parameter problem...................:    0
Num of ICMP in source quench.......................:    0
Num of ICMP in redirect............................:    0
Num of ICMP in echo request........................:    0
Num of ICMP in echo reply..........................:    0
Num of ICMP in timestamp request...................:    0
Num of ICMP in timestamp replay....................:    0
Num of ICMP in addr mask request...................:    0
Num of ICMP in addr mask replay....................:    0
Num of ICMP out message............................:    0
Num of ICMP out errors.............................:    0
Num of ICMP out dest unreachable ..................:    0
Num of ICMP out time exceeded......................:    0
Num of ICMP out parameter problem..................:    0
Num of ICMP out source quench......................:    0
Num of ICMP out redirect...........................:    0
Num of ICMP out echo request.......................:    429
Num of ICMP out echo replay........................:    0
Num of ICMP out timestamp request..................:    0
```

Num of ICMP out timestamp replay.....: 0

Num of ICMP out addr mask request.....: 0

Num of ICMP out addr mask replay.....: 0

MG-IP-1:\Config\E1\Port_1>**gss -1**

If no parameters, all valid intervals and total counters are displayed

Interval	ES	BES	SEFS	LES	LES	UAS	PCV	LCV	Start time	end-time	Total sec
0	0	0	0	0	0	900	0	0	00:00:00	00:15:00	900

show Cumulative Day Count

Interval	ES	BES	SEFS	LES	LES	UAS	PCV	LCV	Start time	end-time	Total sec
0	0	0	0	0	0	900	0	0	00:00:00	00:15:00	900

GetStatistics

Description AdDisplays performance statistics for a selected interface.

Abbreviation **gst**

Syntax **gst** [[{r|v|m}] [r]]

Syntax Description

- r

Resets the statistics on the interface.

- v

Verbose mode: displays additional statistics.

- m

Displays the MIB statistics for this interface or for a selected port.

- RMON

Display partial RMON statistics (etherStatsTable)

Defaults Reset/Verbose/MIB/RMON: {R|V|M|RMON}> [<Reset: {R}]]

User Guidelines

Examples

Ethernet statistics (WAN and LAN interfaces):

MG-IP-1:\Config\WAN>**gst**

Ethernet Statistics on WAN interface

In octets ..... : 0

Out octets..... : 4428544

Frames received..... : 0

Frames transmitted ..... : 69196

In Frames multicast ..... : 0

Out frames multicast..... : 0

In Frames broadcast..... : 0

Out frames broadcast..... : 69196

Alignment errors..... : 0

CRC errors..... : 0

Long frames..... : 0

Short frames ..... : 0

SNMP statistics:

MG-IP-1:\Config\SNMP>**gst m**

Total in packets .....: 0

Total out packets.....: 2

Total in bad version packets .....: 0

Total in bad community name packets.... .....: 0

Total in bad user name packets.....: 0
Total in parse error packets .....: 0
Total in pdu too big .....: 0
Total in packets no such name.....: 0
Total in bad error status.....: 0
Total in read only error status.....: 0
Total in general error status.....: 0
Total in get request packets .....: 0
Total in set request packets.....: 0
Total in accepted get request .....: 0
Total in accepted get next request .....: 0
Total in accepted set request.....: 0
Total in accepted get response.....: 0
Total in trap packets .....: 0
Total out error status:too big .....: 0
Total out error status:no such name.....: 0
Total out error status:bad value .....: 0
Total out error status:bad gen .....: 0
Total out get request packets .....: 0
Total out get request next packets .....: 0
Total out set request packets.....: 0
Total out get response packets.....: 0
Total enable authen trap packets.....: 2
Total enable authen trap packets.....: 1
Total silent drops .....: 0
Total proxy drops .....: 0

Statistics for TDM interface:

The values displayed are the combined values for all T1/E1 ports

MG-IP-1:\Config\E1>**gst**

Bitstream statistics on E1 interface

In octets .....: 3810716672
Out octets.....: 2476095395
Frames received.....: 667305431
Frames transmitted .....: 667305349
TDM Tx Clock Source .....: LoopBack

MIB statistics for individual port:

MG-IP-1:\Config\E1\Port_1>**gst m**

Interface name ..... : Port_1
Interface type ..... : E1 device
Largest datagram ..... : 128
Interface speed ..... : 2048000
Admin link status ..... : Link-up
Oper link status ..... : Link-down
Oper link last changed ..... : 0 days 0h:0m:1s
In octets ..... : 1043141786
Out octets ..... : 708073014

RMON statistics (to add)

GetStatus

Description Displays the operational status of the system or a selected interface.

Abbreviation **gs [session]**

Syntax **gs**

TDM over Packet:

gs [<session_name_or_abbreviation>] [<flags>]

Syntax Description TDM Over Packet only:

- <session_name_or_abbreviation>

The session for which

- <flags>

one or more flags separated

r: reset the statistics

v: for verbose status

Defaults

User Guidelines The information displayed depends on the directory where the command is executed. The command returns a different status for an interface depending on whether the interface is operating as an Ethernet port or a bitstream port. The TDM Over Packet application has its own status report. Enter gs r to reset the jitter overflow and underflow counts in the TDM Over Packet application report. Examples of all the gs reports are shown below.

Examples **Operational status of an Ethernet interface (WAN or LAN):**

```
MG-IP-1:\Config\WAN>gs
Status of interface
Link      :                                        UP
PHY status..................................... :  Working
AutoNeg ....................................... :  Done
Peer advertisement value....................... :  43E1
Speed (Mb/s) .................................. :  100
Duplex mode ................................... :  FULL
Flow control .................................. :  OFF
MAC loopback .................................. :  Disabled
DHCP client state.......                          Received
                                                  ip:169.254.1.116
Default gateway...........:                        169.254.1.1
Subnet mask..............:                        255.255.255.0
DHCP server ip...........:                        169.254.1.1
Syslog server IP.........:                        169.254.1.1
TFTP server IP...........:                        169.254.1.1
Configuration file path..:                        ariel.txt
```

Operational status of the bitstream interface (E1 or T1):

MG-IP-1:\Config\E1>**gs**

Status of interface

link status.....: Port1

Link .....: Down

LIU loopback.....: Disable

LIU database loopback .....: Disable

TDM Tx Clock Source.....: LoopBack

dsx1NoAlarm.....:

dsx1RcvFarEndLOF.....: -

dsx1XmtFarEndLOF.....: -

dsx1RcvAIS.....: - ais (rx)

dsx1XmtAIS.....: -

dsx1LossOfFrame.....: -

dsx1LossOfSignal.....: los

dsx1LoopbackState.....:

dsx1RcvFarEndLOMF.....:

dsx1XmtFarEndLOMF.....:

MG-IP-1:\Config\E1\Port_1>**gs**

Port link 1 .....: DOWN

Alarm status port 1 .....: los

LIU loopback port 1 .....: Disable

Operational status of the TDM Over Packet application:

MG-IP-1:\Config\TDM_Over_Packet>**gs s01**

Session s01 Status

Item	Status/Value
Clocking mode .....:	Line 1 - master
Eth to TDM direction .....:	Up
TDM to Eth direction .....:	Up
Current jitter buffer delay (ms) .....:	5.250
TDM link status.....:	Up
Valid Eth packets per sec.....:	Up: 100% of 2000 pps
Handled Eth packets.....:	44463768

```
Handled TDM packets.......................................:  44464927
Late Eth packets .........................................:  0
Underrun Eth packets .....................................:  0
Overrun Eth Packets ......................................:  0
Invalid sequence Eth Packets .............................:  0
Malformed packets counter ................................:  0
Packets with L bit counter ...............................:  0
Packets with R bit counter................................:  0
Jitter maximum level (ms).................................:  5.625
Lost Eth packets .........................................:  -
Duplicate Eth packets ....................................:  -
OOB signaling Out packets ................................:  0
OOB signaling In packets..................................:  0
Jitter minimum level (ms) ................................:  4.500
Peer response to ping.....................................:  Yes
Peer next hop MAC address ................................:  00-50-C2-15-14-D6
```

GetStatusBoard

Description Displays the MG-IP's operational status.

Abbreviation **gsb**

Syntax **gsb**

Syntax Description

Defaults

User Guidelines

Examples

```
MG-IP-1:\Config>gsb
Power up test succeeded
Interface LAN link ..... :   UP
Interface WAN link ..... :   UP
                             Port1
Interface E1 link ..... :    UP
```

GetStatusIfs

Description Displays the operational status of all three traffic interfaces.

Abbreviation **gsi**

Syntax **gsi**

Syntax Description

Defaults

User Guidelines

Examples

```
MG-IP-1:\Config>gsi
LAN interface configuration
Link ......................................:  UP
PHY status.................................:  Working
AutoNeg ...................................:  Done
Peer advertisement value...................:  43E1
Speed (Mb/s) ..............................:  100
Duplex mode ...............................:  FULL
Flow control ..............................:  OFF
MAC loopback ..............................:  Disabled
DHCP client state .........................:  Request sent
DHCP server ip.............................:  -
E1 interface configuration                   Port1
link status................................:  ----Port1
-------------------------
Link ......................................:  Up
LIU loopback...............................:  Disable
LIU database loopback......................:  -- Disable
TDM Tx Clock Source.....:                    LoopBack
dsx1NoAlarm.............:                    no alarm
dsx1RcvFarEndLOF........:                    -
dsx1RcvAIS..............:                    -
dsx1XmtAIS..............:                    -
dsx1LossOfFrame.........:                    -
dsx1LossOfSignal........:                    -
dsx1LoopbackState.......:                    -
dsx1RcvFarEndLOMF.......:                    -
dsx1XmtFarEndLOMF.......:                    -
```

WAN interface configuration

Link .....:	UP
PHY status.....:	Working
AutoNeg .....:	Done
Peer advertisement value.:	43E1
Speed (Mb/s) .....:	100
Duplex mode .....:	Full
Flow control .....:	Off
MAC loopback .....:	Disabled
DHCP client state .....:	Request sent
DHCP server ip.....:	-

GetSystemDesc

Description Displays SNMP system description.

Abbreviation **gsd**

Syntax **gsd**

Syntax Description

Defaults

User Guidelines

Examples

```
MG-IP-1:\Config\SNMP>gsd
Running_config                  161
Request port                    162
Trap port                       MG-IP-1 R03.01.00_D012-202
SNMP system description
SNMP system contact
SNMP system name
SNMP system location
Modified Running_config
Request port                    161
Trap port                       162
SNMP system description
SNMP system contact
SNMP system name
SNMP system location
```

GetTimeSlotMap

Description Displays the time slot allocation of the port or of all the ports.

Abbreviation **gstm**

Syntax **gstm** <port number>

Syntax Description

- **<**port number {ALL|P1}>

Defaults

User Guidelines An “X” means the time slot is allocated, a “-” means the time slot is not allocated.

Examples

```
MG-IP-1:\Config\TDM_Over_Packet>gstm p1
Running configuration
TimeSlot#      0----0----1----1----2----2----3-
               0----5----0----5----0----5----0-
Port 1         fXXXXXXXXXXXXXXXXXXXXXXXXXXXXXX
Modified configuration
TimeSlot#      0----0----1----1----2----2----3-
               0----5----0----5----0----5----0-
Port1          fXXXXXXXXXXXXXXXXXXXXXXXXXXXXXX
```

GetTrapManagers

Description Displays the list of SNMP Trap managers and their IDs.

Abbreviation **gtm**

Syntax **gtm**

Syntax Description

Defaults

User Guidelines The displayed manager ID is used when calling the rtm function to delete a request manager entry.

Examples

MG-IP-1:\Config\SNMP>**gtm**

Mngr ID	Mngr Community Name	IP addr
1	Trp Dflt name	10.101.1.200
2	trap2	10.20.30.40
3	trap3	11.21.31.41
4	trap4	12.22.32.42
5	trap5	13.23.33.43

GetUsers

Description Displays the operational status of the system or a selected interface.

Abbreviation **gu**

Syntax **gu**

Syntax Description

Defaults

User Guidelines The information displayed depends on the directory where the command is executed. The command returns a different status for an interface depending on whether the interface is operating as an Ethernet port or a bitstream port. The TDM Over Packet application has its own status report. Enter gs r to reset the jitter overflow and underflow counts in the TDM Over Packet application report. Examples of all the gs reports are shown below.

Examples

MG-IP-1:\Admin\Users>**gu**

UserName	Group Timeout	CommApp
Current Users:		
view	Viewer -1	All
logger	Viewer -1	All
oper	Oper 60	All
admin	Admin -1	All
bdadmin	Admin 60	UART
fred	Viewer 10	All
superuser	Admin -1	All
Modified Users:		
view	Viewer -1	All
logger	Viewer -1	All
oper	Oper 60	All
admin	Admin -1	All
bdadmin	Admin 60	UART
fred	Viewer 10	All
superuser	Admin -1	All

GetVersion

Description	Displays the MG-IP's firmware version.
Abbreviation	**gv**
Syntax	**gv**
Syntax Description	
Defaults	
User Guidelines	The first two digits are the major release number, and the second two are the minor release number. The remaining digits show internal release numbers. The following example shows Release 3.01 of the MG-IP-1 firmware.
Examples	MG-IP-1:\Config>**gv** MG-IP-1 R03.01.01_D026-202

ListClocks

Description List status of all clocks

Abbreviation **Lc**

Syntax Lc

Syntax Description

Defaults

User Guidelines

Examples MG-IP-4:\c\clk lc

Output:

```
Priority     Name                Abbr IF  PW          ACTIVE
--------      ----                ----   --  ----------  ------
Primary    Primary Clock       Pri    0   0x1         Yes
Secondary Secondary Clock   Sec   0   0x0
```

ListOfSessions

Description Displays all defined sessions.

Abbreviation **ls**

Syntax **ls** [<mode of sessions>]

Syntax Description

- <mode of sessions>

  Enable: display only the enabled sessions

  Disable: display only the disabled sessions

Defaults The default mode is to display all the defined sessions

User Guidelines

Examples

MG-IP-1:\Config\TDM_Over_Packet>**ls**

Session Name	Session Abbr	modified_config	running_config
Session01	s01	Session Enabled	Session running

PwTDMCfgRtpHdrUsed

Description Configure RTP header

Abbreviation rtp

Syntax rtp <session name or abbreviation <yes/no>

Syntax Description <yes/no >

- True
- False

Defaults False (Enabled in differential timing)

User Guidelines If set to False: an RTP header is not pre-pended to the TDM packet

RTP must be enabled for all sessions when module is configured to work in differential timing mode.

Examples MG-IP-4:\Config\TDM_Over_Packet\scfg>RTP s01 True

Reload

Description	Restarts the MG-IP using the startup configuration.
Abbreviation	**rl**
Syntax	**rl**
Syntax Description	
Defaults	
User Guidelines	If any configuration changes were made to the modified running-config, they will be lost unless a Replace (rp) command was executed first. Use the ReplaceReload (rr) command to perform both operations in a single step.
Examples	MG-IP-1:\Config>**rl** MG-IP-1 R03.01.01_D026-202 Login:

RemoveRequestManager

Description Removes a request community name from the SNMP list of communities.

Abbreviation **rrm**

Syntax **rrm** <manager_id>

Syntax Description

- <manager_id>

  The ID number of the request manager to be removed. You can get the ID number of a request manager by running the GetRequestManager (grm) command.

Defaults

User Guidelines An “X” means the time slot is allocated, a “-” means the time slot is not allocated.

Examples MG-IP-1:\Config\SNMP>**rrm 2**

The request was updated successfully in active ConfigDB

RemoveSession

Description Remove a TDM over Packet application session.

Abbreviation **rms**

Syntax **rms** <session_name_or_abbreviation>

Syntax Description

- <session_name_or_abbreviation>

  The session to be removed.

Defaults

User Guidelines

Examples MG-IP-1:\Config\TDM_Over_Packet\Session_config>**rms s01**

The request was updated successfully in modified running_config.

Use \c\rp to save the modified running_config

The command completed successfully.

RemoveSyslogServer	
Description	Remove Syslog server
Abbreviation	**rsls**
Syntax	\Config\General\Syslog
Syntax Description	Parameters <server-id (1-3)>
Defaults	
User Guidelines	Remove one of the configured (up to 3) Syslog server
Examples	**rsls 1**

RemoveTrapManager

Description Removes a manager from the list of SNMP Trap managers.

Abbreviation **rtm**

Syntax **rtm** <manager_id>

Syntax Description

- <manager_id>

  The ID number of the Trap manager to be removed. You can get the ID number of a Trap manager by running the gtm command

Defaults

User Guidelines If any configuration changes were made to the modified running-config, they will be lost unless a Replace (rp) command was executed first. Use the ReplaceReload (rr) command to perform both operations in a single step.

In the following example, after listing the Trap communities, the second listing is removed. Displaying the list again shows that the remaining communities retain the same ID that they had before the community was deleted.

Examples

MG-IP-1:\Config\SNMP>**gtm**

Mngr	Mngr Community Name	IP addr
1	Trp Dflt name	10.101.1.200
2	trap2	10.20.30.40
3	trap3	11.21.31.41
4	trap4	12.22.32.42
5	trap5	13.23.33.43

MG-IP-1:\Config\SNMP>**rtm 2**

The request was updated successfully in active ConfigDB

Mngr	Mngr Community Name	IP addr
1	Trp Dflt name	10.101.1.200
3	trap3	11.21.31.41
4	trap4	12.22.32.42
5	trap5	13.23.33.43

RenameSession

Description Renames a session.

Abbreviation **rens**

Syntax **rens** <session_name_or_abbreviation> <new_session_name> <new_session_abbreviation>

Syntax Description

- <session_name_or_abbreviation>

  A defined session name or abbreviation.

- <new_session_name>

  The new name for the session (up to 31 characters).

- <new_session_abbreviation>

  The new abbreviation for the session (up to 4 characters).

Defaults

User Guidelines

Examples MG-IP-1:\Config\TDM_Over_Packet\Session_config>**rens s01 Session02 s02**

The request was updated successfully in modified running_config.

Use \c\rp to save the modified running_config

The command completed successfully.

Replace

Description	Replaces the restart configuration with the modified running configuration.
Abbreviation	**rp**
Syntax	**rp**
Syntax Description	
Defaults	
User Guidelines	This command is used to save the modified running configuration as the startup configuration. The modified running-config contains all parameter changes made since the last restart.
Examples	MG-IP-1:\Config\>**rp** The command completed successfully.

ReplaceReload

Description	Replaces the configuration with the modified running configuration and the restarts the MG-IP.
Abbreviation	**rr**
Syntax	**rr**
Syntax Description	
Defaults	
User Guidelines	This command is used to save the modified running configuration to the startup configuration. The modified running-config contains all parameter changes made since the last restart.
Examples	MG-IP-1:\Config\>**rr** MG-IP-1 R03.01.01_D026-202 Login:\>

SatopSendLBitOnAIS

Description	enable/disable Lbit set upon AIS defect detection, in structure agnostic mode
Abbreviation	lbit
Syntax	lbit <Lbit-mode>
Syntax Description	<lbit-mode> • Enable • Disable
Defaults	Disable
User Guidelines	If enabled, and AIS defect is detected - sends the packet with the L bit set to 1 The new field will be displayed in the GetGlobalConfig (‘ggc’) command of the application
Examples	MG-IP-4:\Config\TDM_Over_Packet\SCFG> lbit s01 Enable

SetActiveClock

Description Set clock to serve as the active clock, the recovered frequency will be used from the active clock

Abbreviation **Sac**

Syntax **sac** <Clock Name>

Syntax Description <Clock Name>

- pri (primary)
- sec (secondary)

Defaults

User Guidelines Limitations:

Session connect to clock must be enabled

Works only in recovery clock mode

Examples MG-IP-4:\c\clk sac pri

SetCESappTestMode

Description	Set the test mode for the TDM over Packet application.
Abbreviation	**sctm**
Syntax	**sctm**
Syntax Description	
Defaults	Entering **sctm** enables loopback testing without a second MG-IP.
User Guidelines	This command must be run to do loopback testing using only one MG-IP. A physical loopback is also required for this function to work. Either use an external loopback connector on the WAN port or use the MAC loopback command (sdml). The following commands first set a MAC loopback then perform sctm to set a logical application loopback.
Examples	MG-IP-1:\Config\WAN>**sdml on** The command completed successfully. MG-IP-1:\Config\WAN>..\top MG-IP-1:\Config\TDM_Over_Packet>sctm CES test is being activated on service side The command completed successfully

SetChannelBandwidth

Description Sets the Channel Bandwidth

Abbreviation **scb**

Syntax **scb** <channel-bandwidth>

Syntax Description

- <channel-bandwidth>

  {64K|56K}

Defaults

User Guidelines This command is only valid in structured mode and only when the port is configured for T1.

Examples

SetCLIPrompt

Description Sets the CLI prompt.

Abbreviation **scp**

Syntax **scp** <prompt>

Syntax Description

- <prompt>

  The new prompt, up to 12 characters.

Defaults

User Guidelines The prompt will be displayed the next time the product is restarted.

Examples MG-IP-1:\Config\General>**scp MyPrompt**

The request was updated successfully in startup-config.

SetConfigBitStreamClockingMode

Description Sets the bitstream clocking mode for the T1/E1 interface.

Abbreviation **sccm**

Syntax **sccm** <clocking_mode>

Syntax Description

- <clocking_mode>

  Possible values are: RECOVERY, INTERNAL, EXTERNAL, LOOPBACK, LINE 1 or DIFFERENTIAL.

  RECOVERY uses the recovered clock produced by the adaptive clock recovery algorithm as the Tx clock. This causes the unit to be a slave.

  INTERNAL uses a clock generated internally by the MG-IP. This is useful in test conditions when the received trunks are derived from internal or loopedback bit streams.

  EXTERNAL uses a clock provided by the user on pin 18 (EXTCLK) It is used on a units operating as master.

  LOOPBACK uses the local LIU clock, which is based on its E1 or T1 connection, as the Tx clock. This causes the unit to be a Master.

  LINE 1 (line timing) use Line 1 RCV clock as TC clock to all other ports.

  DIFFERENTIAL - work in differential timimng mode based on a common clock received from the external clock pin.

Defaults The default mode is to display all the defined sessions

User Guidelines All ports must be disabled; all sessions should be removed

Examples MG-IP-1:\Config\clk>**sccm loopback**

The request was updated successfully in modified running_config.

The configuration change will be activated after the next Replace&Reload (\c\rr

SetConfigCESClock

Description Configures the TDM over Packet application maximum jitter.

Abbreviation **cclk**

Syntax **cclk** <all/session-name or abbreviation> <max_jitter> [<payload_length>]

Syntax Description

- <all/session-name or abbreviation>

  a defined session name or abbreviation

- <max_jitter>

  A number of msec, from 1 to 200. Estimate of the maximum jitter (+ or -).

  For example, a setting of 50 milliseconds results in a range from 0 to 100 msec. This parameter determines the length of the jitter buffer used to smooth the effects of distortion due to network congestion, timing drift, or route changes.

- <payload_length>

  The number of frames in the CES packet payload.

  The application will calculate the number of bytes based on the frame length and the number of selected timeslots per frame. The number of frames that can fit in the payload is a function of the line format (E1 or T1), the header format (CESoP/SAToP or CESoEth), and the number of selected timeslots. Full T1 frames are smaller than E1 frames, and the CESoEth header is smaller than the CESoP/SAToP header

Defaults

User Guidelines The maximum jitter and the payload length combine to define the length of the jitter buffer. The jitter buffer is also impacted by the clock rate of the data, the header size, and the number of ports enabled. This function will return a message with the valid range of max jitter and payload length if an invalid value is entered.

Examples MG-IP-1:\Config\TDM_Over_Packet>cclk s01 50

The request was updated successfully in modified running_config.

The configuration change will be activated after the next Replace&Reload (\c\rr)

Activate the modified sessions by disabling (ssd) then enabling them (sse) or perform replace and reload (\c\rr)

SetConfigCESEmulationType

Description Defines the TDM over Packet application format as structured or unstructured.

Abbreviation **cet**

Syntax **cet** <transport-emulation> <'ALL' or list of ports>

Syntax Description

- <transport-emulation>

  Struct or UnStruct.

  Struct: TDM data is structured, with framing defined.

  UnStruct: TDM data is unstructured and no framing is assumed.

- <'ALL' or P1>

Defaults

User Guidelines This command can be used only if no sessions (if the port is unframed) and no DS0 bundles (if the port is framed) are attached to the port. Otherwise, the commands will fail with the following error message:

"Cannot apply this configuration since one or more sessions are attached to the port(s).

Use "\c\top\ssp <session abbr> none" for unstructured port or "\c\top\ssts <session abbr> none" for structured port to detach the session"

If only a DS0 bundle (but not a session) was attached to the port (by SNMP), the following error message is printed:

"Cannot apply this configuration since a DS0-bundle is attached to to the port(s)"

The port must be disabled before using this command.

Examples MG-IP-1:\Config\TDM_Over_Packet>**cet struct p1**

The request was updated successfully in modified running_config.

Use \c\rp if you wish to save the modified running config.

SetConfigCESIP

Description Displays the operational status of the system or a selected interface.

Abbreviation **ccip**

Syntax **ccip** <session name or abbreviation> <target_ip_address> [<ip_tos_value>]

Syntax Description

- <session-name or abbreviation>

A defined session name or abbreviation.

- <target_ip_address>

The IP address of the target MG-IP in the format “nn.nn.nn.nn.”, where nn is a number from 0 to 255.

- <ip_tos_value>

The value of the IP Type of Service field, from 0x00 to0xFF.

Defaults

User Guidelines The target IP address is required so that the session can identify the target MG-IP. Multiple sessions can target the same MG-IP. This parameter is required for all header types.

Examples MG-IP-1:\Config\TDM_Over_Packet\Session_config>**ccip S01 200.120.34.08 0x5**

The request was updated successfully in modified running_config.

Use \c\rp to save the modified running_config

Activate the modified sessions by disabling (ssd) then enabling them (sse) or perform replace and reload (\c\rr)

SetConfigCESPaylength

Description Configures the TDM over Packet application payload size.

Abbreviation **ccpl**

Syntax **ccpl** <all/session name or abbreviation><payload_length> [<max_jitter>]

Syntax Description

- <all/session-name or abbreviation>

A defined session name or abbreviation

- <payload_length>

The number of frames in the CES packet payload.

The application will calculate the number of bytes based on the frame length and the number of selected timeslots per frame. The number of frames that can fit in the payload is a function of the line format (E1 or T1), the header format (CESoP/SAToP or CESoEth), and the number of selected timeslots. Full T1 frames are smaller than E1 frames, and the CESoEth header is smaller than the CESoP/SAToP header.

- <max_jitter>

A number of msec, from 1 to 200. Estimate of the maximum jitter (+ or -). For example, a setting of 50 milliseconds results in a range from 0 to 100 msec. This parameter determines the length of the jitter buffer used to smooth the effects of distortion due to network congestion, timing drift, or route changes.

Defaults

User Guidelines

Examples MG-IP-1:\Config\TDM_Over_Packet>**ccpl s01 20**

The request was updated successfully in modified running_config.

Use \c\rp to save the modified running_config

Activate the modified sessions by disabling (ssd) then enabling them (sse) or perform replace and reload (\c\rr)

SetConfigCESVlan

Description Configures the TDM over Packet application VLAN settings.

Abbreviation **ccvl**

Syntax **ccvl** <session_name_or_abbreviation> <vlan_mode> [<vlan_id>][<VLAN-priority: (0-7)>] [<OobSig-VLAN-priority: (0-7)>]

Syntax Description

- <session_name_or_abbreviation>

The session to which to configure.

- <vlan_mode>

Either Enable or Disable.

- <vlan_id>

The VLAN ID, from 0 to 4095.

- <vlan_priority>

The VLAN priority, from 0 to 7.

[<OobSig-VLAN-priority: (0-7)>]

OOS VLAN priority 0 to 7

Defaults Disabled by default.

User Guidelines The CES packets for the selected session will have the defined VLAN embedded in the packet header.. Management traffic that supports the session will use the same VLAN configuration.

When a virtual LAN is defined for the TDM over Packet application data, the priority can be raised (0 is the highest priority) to ensure that the TDM data has first use of the available bandwidth.

If multiple sessions are targeted to the same IP, it is recommended that all these sessions have the same VLAN ID.

Examples MG-IP-1:\Config\TDM_Over_Packet\Session_config>**ccvl enable 2000**

0 The request was updated successfully in modified running_config.

The configuration change will be activated after the next Replace&Reload (\c\rr).

Activate the modified sessions by disabling (ssd), then enabling them (sse), or perform replace and reload (\c\rr).

SetConfigEth

Description Configures Ethernet parameters (LAN or WAN).

Abbreviation **sce**

Syntax **sce** <speed> [<duplex_mode>]

Syntax Description

- <speed>

  Possible values are: 10, 100, or AUTO. Selects the Ethernet speed in Mbps.

- <duplex_mode>

  Either Full or Half. Selects full duplex or half duplex.

Defaults

User Guidelines

Examples MG-IP-1:\Config\LAN>**sce 100 full**

The request was updated successfully in modified running_config.

Use \c\rp if you wish to save the modified running config.

SetConfigEthFlowControl

Description Configures flow control mode (LAN or WAN).

Abbreviation **scef**

Syntax **scef** <flow_control_mode>

Syntax Description

- <flow_control_mode>

  Either ON or OFF.

Defaults

User Guidelines Configures bandwidth limitation (LAN or WAN).

Examples MG-IP-1:\Config\LAN>**scef on**

The request was updated successfully in modified running_config.

Use \c\rp if you wish to save the modified running config.

SetConfigEthLimit

Description Set the WAN port LAN traffic bandwith limit (towards the PSN)

Abbreviation **cel**

Syntax **cel** <bandwidth>

Syntax Description

- <bandwidth>

  From 1 to 100000 in kbits. 0 indicates no limit.

Defaults

User Guidelines Given the network bandwidth limit of the PSN (packet switch network) connected to the WAN port, LAN port bandwidth should be calculated and limited (using the cel CLI command) so as to not affect CES flow. For example, if the assumed PSN bandwidth is 10 Mbps and the MG-IP-4 uses 4 full E1/T1 (say 9 Mbps) links, LAN port bandwidth should be limited to 1Mbps.

To calculate the exact bandwidth required for the TDM CES flow (after the port and sessions have been configured), use the Config\TDM_Over_Packet>ggc CLI command and observe the "Enable session BW" and the "Disable session Bandwidth" fields.

Add 1.8 Mbps overhead to their values.

Examples MG-IP-1:\Config\WAN>cel 4000

The request was updated successfully in modified running_config.

Use \c\rr to restart the system.

SetConfigLIUlineBuildout

Description Configures LIU line build out.

Abbreviation **sltt**

Syntax **sltt** <line_build_out>

Syntax Description

- <line_build_out>

  E1 options: E1_75, E1_120, E1_75_HRL, or E1_120_HRL.

  T1 options: T1_133, T1_266, T1_399, T1_533, T1_655, T1_7.5, T1_15, or T1_22.5.

  Select this parameter as a function of the impedance or length of the connection to the T1/E1 source.

Defaults

User Guidelines

Examples MG-IP-1:\Config\E1\Profile_1>**sltt e1_75**

The request was updated successfully in modified running_config.

Use \c\rp if you wish to save the modified running config.

SetConfigLIULineCode

Description Configures LIU line coding.

Abbreviation **sllc**

Syntax **sllc** <line_code>

Syntax Description

- <line_code>

  Possible values are: AMI, HDB3, or B8ZS.

  E1: HDB3

  T1: B8ZS is used for T1;

  Both E1, T1: AMI

Defaults

User Guidelines The value used depends on the settings of the T1/E1 source.

Examples MG-IP-1:\Config\E1\Profile_1>**sllc ami**

The request was updated successfully in modified running_config.

Use \c\rp if you wish to save the modified running config.

SetConfigLIURxTerm

Description Configures LIU line Rx termination.

Abbreviation **slrt**

Syntax **slrt** <line_termination>

Syntax Description

- <line_termination>

  Possible values are: TermDis, 75ohm, 100ohm, or 120ohm.

  TermDis indicates that the internal Rx termination is disabled. Otherwise:

  E1: 75 Ohm or 120 Ohm.

  T1: 100 Ohm.

Defaults

User Guidelines The value used depends on the settings of the T1/E1 source.

Examples MG-IP-1:\Config\E1\\Profile_1>**slrt 120ohm**

The request was updated successfully in modified running_config.

Use \c\rp if you wish to save the modified running config.

SetConfigMPLS

Description Configures session's MPLS parameters. If MPLS-mode is enabled, the fields 'MPLS-label-1' and 'Destination MAC address' are mandatory

Abbreviation **scm**

Syntax **scm** <session name> <MPLS-mode>

[<MPLS local-to-peer label: (0x0-0xFFFFF)>]

[<MPLS peer-to-local label: (0x0-0xFFFFF)>]

[<MPLS-experimental: (0x0-0x7)>]

[<MPLS-TTL: (0x2-0xFF)>]

[<OobSig-MPLS-experimental: (0x0-0x7)>]

[<Target MAC address>

Syntax Description <session name or abbreviation:>

<MPLS-mode: {Enable|Disable}>

[<MPLS local-to-peer label: (0x0-0xFFFFF)>]

[<MPLS peer-to-local label: (0x0-0xFFFFF)>]

[<MPLS-experimental: (0x0-0x7)>]

[<OobSig-MPLS-experimental: (0x0-0x7)>]

[<MPLS-TTL: (0x2-0xFF)>]

[<Target MAC address: (xx-xx-xx-xx-xx-xx) - hex digits>]

Defaults

User Guidelines

Examples MG-IP-1:\Config\TDM_Over_Packet\Session_config>**scm s01 enable**

The request was updated successfully in modified running_config.

Use \c\rp to save the modified running_config

Activate the modified sessions by disabling (ssd) then enabling them (sse) or perform replace and reload (\c\rr)

SetConfigUART

Description Configures the CONSOLE port.

Abbreviation **scu**

Syntax **scu** <baud_rate>

Syntax Description

- <baud_rate>

  Possible values are: 9600, 19200, 38400, 57600, or 115200 bps.

Defaults The default baud rate is 115200.

User Guidelines

Examples MG-IP-1:\Config\CONSOLE>**scu 9600**

The request was updated successfully in modified running_config.

The configuration change will be activated after the next Replace&Reload (\c\rr)

SetDateTime

Description Configures the system time and date.

Abbreviation **sdt**

Syntax **sdt** <dd/mmm/yy> [<HH:MM:SS>]

Syntax Description

- <dd/mmm/yy>

  Date in days, months, and years, separated by "/"; as shown in the example below, the month is a three-letter abbreviation.

- <HH:MM:SS>

  Time in hours, minutes, and seconds, separated by ":".

Defaults

User Guidelines

Examples MG-IP-1:\Admin>**sdt 25/Jun/2005 11:54:30**

Date and time set successfully

Current date: 25 Jun 2005

Current time: 11:54:30

SetDefaultDB

Description Sets the MG-IP startup configuration database to a default state based on the line format and the Tx clock source.

Abbreviation **sddb**

Syntax **sddb** <line_format> <Tx_clock_source> [<model_template>]

Syntax Description

- <line_format>

Either E1 or T1.

- <Tx_clock_source>

Possible values are: LOOPBACK, INTERNAL, EXTERNAL, or RECOVERY.

RECOVERY uses the clock calculated from received bitstream packets as the Tx clock (the other MG-IP is the master).

INTERNAL uses a clock internal to the MG-IP as a source. Set the unit to Internal instead of Master in test configurations when the T1/E1 signal is looped back.

EXTERNAL uses a clock provided by the user on Pin 18 (EXTCLK).

LOOPBACK uses the local LIU clock, which is based on its E1 or T1 connection, as the Tx clock (this MG-IP is the master).

Line 1 (line timing , use Line 1 RCV clock as TX clock to all other ports)

- <model_template>

For internal use only.

Defaults

User Guidelines This command sets the MG-IP to a default status. It should be used only for initial configuration of the device. Any individual parameter changes in the modified running-config will be lost.

Examples MG-IP-1:\Admin>**sddb e1 loopback**

The command completed successfully.

The request was updated successfully in startup-config.

Reload is required to make the configuration effective ('\c\rl')

SetDefGateway

Description Sets the default Gateway IP address.

Abbreviation **sdg**

Syntax **sdg** <IP_address>

Syntax Description

- <IP_address>

  IP address of the default gateway in the format “nn.nn.nn.nn.”, where nn is a number from 0 to 255.

Defaults

User Guidelines This parameter is required when sending messages to IP addresses that are not on the local subnet.

Examples MG-IP-1:\Config\General>**sdg 50.45.123.01**

The request was updated successfully in modified running_config.

The configuration change will be activated after the next Replace&Reload (\c\rr)

SetDynamicMACLpbk

Description	Enable or disable the MAC loopback (WAN or LAN).
Abbreviation	**sdml**
Syntax	**sdml** <mode>
Syntax Description	▪ <mode> Either ON or OFF.
Defaults	OFF
User Guidelines	This command is for test and debug purposes only. Note that this command immediately puts the selected interface into loopback mode. The loopback will remain until the next restart or until invocation of the sdml off command. Use the sctm command to loopback the CES application as well.
Examples	MG-IP-1:\Config\WAN>**sdml on** The command completed successfully.

SetEmulationCircuitID

Description Sets emulation circuit IDs for the CESoETH.

Abbreviation **sec**

Syntax **sec** <session name> <local ECID> <peer ECID> [<OobSig local ECID>][<OobSig peer ECID: (0x0-0xFFFFF)>]

Syntax Description

- <session name or abbreviation/all:

  (name is up to 31 chars, abbreviation is up to 4 chars)>
- <local ECID: (0x0-0xFFFFF)>
- <peer ECID: (0x0-0xFFFFF)>
- [<OobSig local ECID: (0x0-0xFFFFF)>]
- [<OobSig peer ECID: (0x0-0xFFFFF)>]

Defaults

User Guidelines

Examples MG-IP-1:\Config\TDM_Over_Packet\Session_config>**sec all 0x1000**

0x1001 The request was updated successfully in modified running_config.

Use \c\rp if you wish to save the modified running config.

SetExternalClockDirection

Description Set External Clock Direction.

Abbreviation **secd**

Syntax **secd <Exe clock direction>**

Syntax Description <Exe clock direction>

- IN
- OUT

Defaults

User Guidelines In diff clock mode, external clock direction must be IN.

Examples MG-IP-4:\c\clk secd IN

SetExternalClockFreq

Description	Set External Clock Frequency
Abbreviation	**Secf**
Syntax	**Secf** <Rate>
Syntax Description	<Rate: A=1544,B=2048,C=10240,D=16384, E=25000 (kHz)>
Defaults	
User Guidelines	All sessions and ports should be disabled
Examples	MG-IP-4:\c\clk secf A

SetFramedParams

Description Configures framing parameters for internal framing.

Abbreviation **sfp**

Syntax **sfp** <format>

Syntax Description

- <format>

  E1: PCM30 or PCM31.

  T1: ESF or D4.

Defaults

User Guidelines The framing option selected is used by the internal framer to synchronize with the T1/E1 source.

This commands can be used only if no sessions (if the port is unframed) and no DS0 bundles (if the port is framed) are attached to the port. Otherwise, the commands will fail with the following error message:

"Cannot apply this configuration since one or more sessions are attached to the port(s).

Use "\c\top\ssp <session abbr> none" for unstructured port or "\c\top\ssts <session abbr> none" for structured port to detach the session"

If only a DS0 bundle (but not a session) was attached to the port (by SNMP), the following error message is printed:

"Cannot apply this configuration since a DS0-bundle is attached to to the port(s)"

The port must be disabled before using this command.

Examples MG-IP-1:\Config\E1\Port_1>**sfp PCM31**

The request was updated successfully in modified running_config.

Use \c\rp if you wish to save the modified running config.

If the Bitstream port is in unframed mode, the frame format cannot be configured.

SetIdlePattern	
Description	This command sets the default Idle Pattern played out on the TDM interface on various defects,according to policy, including receipt of L bit, packet loss and when the pseudowire is administratively disabled.
Abbreviation	**sip**
Syntax	\Config\TDM_Over_Packet\Policy sip
Syntax Description	Parameters: < (0x0-0xFF) >
Defaults	
User Guidelines	
Examples	Sip 0x0

SetIPConfig

Description Set the IP Configuration (WAN or LAN).

Abbreviation **sic**

Syntax **sic** <ip-config-mode> [<IP_address>][<ip-sub-net-mask>] [SHARE]

Syntax Description

- <ip-config-mode: {disabled|static|dhcp}>

  disable: no IP activity processed on this interface, including management traffic static: user defines a static IP and network mask dhcp: the DHCP client requests an IP address and network mask from a DHCP server for this interface

- [<IP_address>]

  The IP address of the selected interface in the format “nn.nn.nn.nn.”, where nn is a number from 0 to 255.

- [<ip-sub-net-mask: (NM1.NM2.NM3.NM4)>]

  The sub-net mask of the selected interface in the format “nn.nn.nn.nn.”, where nn is a number from 0 to 255. The mask must follow the rules of a subnet mask, i.e., continuous bits from the left.

- [SHARE]

  If supplied, the IP address will be applied to both the LAN and WAN interfaces.

Defaults The default option is a static IP

User Guidelines The DHCP option is applied to the LAN and WAN interfaces separately. When DHCP is selected, on startup the MG-IP’s DHCP client requests an IP address and sub-net mask from a responding user-provided and managed DCHP server. TDM traffic will not start to pass from the MG-IP to the WAN until the server responds.

An IP address, sub-net mask and the “share” option can be entered only when the “static” option is selected. An IP of all zeroes is invalid. If the SHARE option is not used, then the IP assigned to the selected interface must be on a different subnet from the other interface. Use the gc commend to see the subnet mask and the sic command to change it.

Examples This example sets a static IP address and subnet mask to both Ethernet interfaces:

MG-IP-1:\Config\WAN>**sic static 100.10.200.45 255.255.255.0 share**

The request was updated successfully in modified running_config.

The configuration change will be activated after the next Replace&Reload (\c\rr)

This example sets the WAN to received its IP address from a DHCP server.

MG-IP-1:\Config\WAN>**sic dhcp**

The request was updated successfully in modified running_config.

The configuration change will be activated after the next Replace&Reload (\c\rr)

SetLayer2App

Description Set layer two support application.

Abbreviation **slta**

Syntax **slta <type of layer 2> [<EtherType>]**

Syntax Description

- type of layer 2 {VLAN|MPLSwCESoP}:>
- [<EtherType (0x600-0xFFFF)>]

Defaults

User Guidelines

Examples MG-IP-1:\Config\TDM_Over_Packet>**slta vlan**

The request was updated successfully in modified running_config.

The configuration change will be activated after the next Replace&Reload (\c\rr

SetLFlagPolicy

Description

This command determines the information played out on the TDM-bound interface upon identification of a defect state through the receipt of a packet with the L-flag set when structure aware emulation is used.(structure agnostic - AIS is always played out) .

Abbreviation **slfp**

Syntax

\Config\TDM_Over_Packet\Policy slfp idle

\Config\TDM_Over_Packet\Policy slfp AIS

\Config\TDM_Over_Packet\Policy slfp Channel Idle

Syntax Description

Parameters: < {idle|allOnes|channelIdle} >

- idle: Idel pattern is played out
- AIS:AIS on the entire trunk is played out.
- Channel Idle: The idle byte is played out instead of payload and 'channel idle' indication is set up in the trunk signaling.

Defaults

User Guidelines

Upon receipt of a packet with the L bit set, the channel idle pattern is always played out on the TDM interface, irrespective of the recived data. In addition, additional actions may be specified for the trunk as specified.

In a point to multi point topology, when grooming is used, special care must be given to the parameters configured in all devices in the topology so hierarchy should be maintained

Examples

slp AIS

SetLIUDynamicLpbk

Description Configure the LIU loopback for a selected port until the next restart.

Abbreviation **sldl**

Syntax **sldl** <mode> [<port>]

Syntax Description

- <mode>

  Possible values are: Local, Remote or Disable.

  Local: Transmitted traffic is looped back and received.

  Remote: Received traffic is looped back and retransmitted.

  Disable: Removes the loopback.

- <port>

  ALL' or P1. This variable is valid only at the E1 level. In the specific port directories the port is implied.

Defaults

User Guidelines Local mode operates when the Tx clock is in Recovery or in Internal mode.

Once a loopback mode is selected, it stays in place until the next device reset or until the command is repeated with the disable optio

Examples MG-IP-1:\Config\E1>**sldl remote p1**

The command completed successfully.

MG-IP-1:\Config\E1\Port_1>**sldl remote**

The command completed successfully.

SetLIULpbk

Description Configure LIU loopback for a selected port and saves in configuration database.

Abbreviation **sll**

Syntax **sll** <mode> [<port>]

Syntax Description

- <mode>

  Possible values are: Disable, Local or Remote.

  Disable: Removes the loopback immediately; clear loopback from the configuration database.

  Local: Transmitted traffic is looped back and received.

  Remote: Received traffic is looped back and retransmitted.

- <port>

  'ALL' or P1. This variable is valid only at the E1 level. In the specific port directories the port is implied.

Defaults

User Guidelines Local mode operates when the Tx clock is in Recovery or in Internal mode. The loopback can be stored in the startup configuration by entering \c\rp. Once a loopback mode is selected, it stays in place until the command is invoked with the disable option.

Examples MG-IP-1:\Config\E1>**sll remote all**

Use \c\rp to save the modified running_config

The command completed successfully.

MG-IP-1:\Config\E1\Port_1>**sll remote**

Use \c\rp to save the modified running_config

The command completed successfully.

SetLOPSPolicy

Description Determines the information played out on the TDM-bound interface while in loss of packet synchronization state (LOPS) when structure-aware emulation is used (structure agnostic - AIS is always played out)

Abbreviation **slp**

Syntax \Config\TDM_Over_Packet\Policy slp idle

\Config\TDM_Over_Packet\Policy slp allOnes

\Config\TDM_Over_Packet\Policy slp Channel Idle

Syntax Description Parameters: < {idle|allOnes|channelIdle} >

- idle: the idle configured byte is played out.
- AIS: AIS on the entire trunk is played out
- Channel Idle: for use with CAS signaling. The idle byte is played out instead of payload and 'channel idle' indication is set up in the trunk signaling.

Defaults

User Guidelines This command determines the information played out on the TDM-bound interface while in loss of packet synchronization state (LOPS) when structure-aware emulation is used (structure agnostic - AIS is always played out). This determines if the idle pattern or AIS pattern is played out or 'channel idle' indication on the trunk interface is specified.

In point-to-multipoint topology, when grooming is used, special care must be given to the parameters configured in all devices in the topology so hierarchy should be maintained.

Examples slp idle

SetPayloadSuppression

Description Set payload suppression when L bit is set

Abbreviation **sps**

Syntax SPS < session name or abbreviation > < Payload Suppression Mode >

Syntax Description < Payload Suppression Mode >

- Enable
- Disable

Defaults

User Guidelines As the other session parameters, this parameter will not immediately be executed and in order to activate it, the session will be disabled and then enabled.

Payload Suppression configuration may be retrieved via the "\c\top\gc < session name or abbreviation >" command.

Examples \c\top\sps

SetPingEnable

Description Set ping enable.

Abbreviation **spe**

Syntax **spe** <session name> <ping enable> [<Target MAC address>]

Syntax Description

- <session name or abbreviation:

  (name is up to 31 chars, abbreviation is up to 4 chars)>
- <ping enable {Enable|Disable}>
- [<Target MAC address: (xx-xx-xx-xx-xx-xx) - hex digits>]

Defaults

User Guidelines The MG-IP periodically sends "keep-alive" pings to the unit at the other end of each session to verify that the link is still active. When communications is lost with the other end, the frequency of the pings is increased until the connection is restored. This capability is normally enabled but can be disabled using this command.

A session definition requires a destination address for the pseudowire packet stream. When the header format includes an IP address, the MG-IP will "ping" the IP address to determine the next-hop MAC address that will be used in the subsequent pseudowire packet headers. When there is no IP address, as with CESoEth headers or with MPLS networks that do not use IP, the user must provide the layer- 2 MAC address explicitly.

When you select the CESoEth option, you enter the MAC using the shce command as a required parameter. The spe command is an optional location for changing the target MAC address.

Examples MG-IP-1:\Config\TDM_Over_Packet\Session_config>**spe t01 enable 00-88-77-66-55-44**

The request was updated successfully in modified running_config.

SetPortsDisable

Description Disables the T1/E1 port.

Abbreviation **spod**

Syntax **spod** <port_numbers>

Syntax Description

- <port_numbers>

  P1

  all - Disable all ports

Defaults

User Guidelines Do not disable a port on an enabled session. Disable the session before disabling the port.

Do not enable a session with a disabled port assigned to it. Enable the port first.

Examples MG-IP-1:\Config\E1>**spod p1**

The request was updated successfully in modified running_config.

Use \c\rp to save the modified running_config.

Port(s) state was changed successfully

SetPortsEnable

Description Enables the T1/E1 port.

Abbreviation **spoe**

Syntax **spoe** <port_numbers>

Syntax Description

- <port_numbers>

  P1

  ALL' - Enable all ports

Defaults

User Guidelines When you define parameters for a session, be sure to enable the ports assigned to the session before enabling the session.

Examples MG-IP-1:\Config\E1>**spoe all**

The request was updated successfully in modified running_config.

Use \c\rp to save the modified running_config.

Port(s) state was changed successfully

SetPortState

Description	Configures the Port state
Abbreviation	**spos**
Syntax	**spos** <mode>
Syntax Description	
Defaults	
User Guidelines	This command is run from the \Config\T1\Port_1 (or E1\Port_1 directory as a short-cut to spod (disable port) and spoe (enable port) commands.
Examples	MG-IP-1:\Config\T1\Port_1>**spos enable**

SetRDPolicy	
Description	Determines the signaling information played out on the TDM-bound interface upon identification of remote-end defect state through the receipt of “10” M bit and “0” L bit.
Abbreviation	**srdp**
Syntax	\Config\TDM_Over_Packet\Policy sdp non \Config\TDM_Over_Packet\Policy srdp rai \Config\TDM_Over_Packet\Policy srdp Channel Idle
Syntax Description	Parameters: < {none|rai|channelIdle} > ▪ none: the payload is not modified. ▪ rai: the RAI pattern is generated on the link. ▪ Channel Idle: the idle byte is played out instead of payload and 'channel idle' indication is set up in the trunk signaling.
Defaults	
User Guidelines	In point-to-multipoint topology, when grooming is used, special care must be given to the parameters configured in all devices in the topology so hierarchy should be maintained.
Examples	srdp none

SetRequestPort

Description Sets SNMP request port.

Abbreviation **srp**

Syntax **srp** <port>

Syntax Description

- <port>

  The SNMP request port, a number from 1 to 65535.

Defaults

User Guidelines

Examples MG-IP-1:\Config\SNMP>**srp 200**

The request was updated successfully in modified running_config.

The configuration change will be activated after the next Replace&Reload (\c\rr)

SetRFlagPolicy	
Description	This command determines the signaling information played out on the TDM-bound interface upon identification of remote-end defect state through the receipt of R-flag set.
Abbreviation	**srfp**
Syntax	\Config\TDM_Over_Packet\Policy slrp non \Config\TDM_Over_Packet\Policy slrp rai \Config\TDM_Over_Packet\Policy slrp Channel Idle
Syntax Description	Parameters: < {none|rai|channelIdle} > ▪ none: the payload is not modified. ▪ rai: the RAI pattern is generated on the link ▪ Channel Idle: the idle byte is played out instead of payload and 'channel idle' indication is set up in the trunk signaling.
Defaults	
User Guidelines	In point-to-multipoint topology, when grooming is used, special care must be given to the parameters configured in all devices in the topology so hierarchy should be maintained.
Examples	srfp none

SetRxEqualizerGainLimit

Description Configures LIU receive equalizer gain limit.

Abbreviation **sreg**

Syntax **sreg** <limit>

Syntax Description

- <limit>

  Possible values are: Short or Long, which have different meanings for E1 and T1 ports.

  E1: Short = -15dB, Long = -43dB.

  T1: Short = -15dB, Long = -36dB.

Defaults

User Guidelines This parameter is set based on the characteristics of the line connecting to the T1/ E1 source.

Examples MG-IP-1:\Config\E1\Profile_1>**sreg short**

The request was updated successfully in modified running_config.

Use \c\rp to save the modified running_config.

Disable and enable the port(s) (spoe/spod or p#\spos) to activate the changes.

SetSessionPorts

Description Assigns a T1/E1 port to a session.

Abbreviation **ssp**

Syntax **ssp** <session_name_or_abbreviation> <Port_ID>

Syntax Description

- <session_name_or_abbreviation>

  The session to which to assign the port

  <Port_ID>

  P1

Defaults

User Guidelines This command defines all ports associated with the session. On the MG-IP-1, only Port 1 can be assigned. This is only applicable to unframed ports.

Examples MG-IP-1:\Config\TDM_Over_Packet>**ssp s01 p1**

The request was updated successfully in modified running_config.

Use \c\rp to save the modified running_config

Activate the modified sessions by disabling (ssd) then enabling them (sse) or perform replace and reload (\c\rr)

SetSessionTimeSlots

Description Replaces selected time slot(s) with a new list

Abbreviation **ssts**

Syntax **ssts** <session name> <port number> <list of time slots>

Syntax Description

- <session name or abbreviation>
- <port number>: P1 or “none” to detach current timeslots
- <list of time slots> or “all”

Enter time slots separated by a space or a range separated by a “-” (e.g. 1 3 4 7-10). This is not relevan if “none” is the second parameter.

Defaults

User Guidelines This command only applies to ports that are configured as structured and to valid timeslots within the following ranges:

- Framed T1 - 1-24
- Framed E1 PCM31 - 1-31
- Framed E1 PCM30 - 1-15, 17-31

The session must be disabled before using this command.

Examples MG-IP-1:\Config\TDM_Over_Packet>**ssts s02 p1 7-10**

The request was updated successfully in modified running_config.

Use \c\rp to save the modified running_config.

Activate the modified sessions by disabling (ssd) then enabling them (sse) or perform replace and reload (\c\rr).

SetSigIdle	
Description	This command sets the default CAS signaling Idle pattern. This is the pattern sent when a failure is detected on the TDM interface, including multi-frame failures. This may need to be different per PW.
Abbreviation	**ssi**
Syntax	\Config\TDM_Over_Packet\Policy ssi
Syntax Description	Parameters: < (0x0-0xFF) >
Defaults	
User Guidelines	
Examples	ssi 0x0

SetSyslogDisable	
Description	Disable Syslog server
Abbreviation	**ssld**
Syntax	\Config\General\Syslog
Syntax Description	
Defaults	
User Guidelines	Disable Syslog server on the product
Examples	**ssld**

SetSyslogEnable	
Description	Enable Syslog server
Abbreviation	**ssle**
Syntax	\Config\General\Syslog
Syntax Description	
Defaults	
User Guidelines	Enable Syslog server on the product
Examples	**ssle**

SetSyslogServer	
Description	Set Syslog server
Abbreviation	**ssls**
Syntax	\Config\General\Syslog
Syntax Description	Parameters: <server-id (1-3)> <ip-address> [port (default 514)]
Defaults	Defulat UDP port is 514
User Guidelines	This command allow you to set up to thgree Syslog servre each with different destination IP uddress and UDP port , Duplicate IP addresses are not allowed.
Examples	**ssls 1 169.254.121.200 514**

SetTDMoPSessionDisable

Description Disables a TDM over Packet application session.

Abbreviation **ssd**

Syntax **ssd** <all/session_name_or_abbreviation>

Syntax Description

- <all/session_name or abbreviation>

  The session to be disabled (name is up to 31 chars, abbreviation is up to 4 chars)

Defaults

User Guidelines Stops traffic on the existing session.

ssd followed by **sse** applies any changes made to the session that are currently in the modified-running config

Examples MG-IP-1:\Config\TDM_Over_Packet>**ssd s02**

The request was updated successfully in modified running_config.

Use \c\rp to save the modified running_config

The command completed successfully.

SetTDMoPSessionEnable

Description Enables a TDM over Packet application session.

Abbreviation **sse**

Syntax **sse** <all/session_name_or_abbreviation>

Syntax Description

- <all/session_name or abbreviation>

  The session to be enabled (name is up to 31 chars, abbreviation is up to 4 chars)

Defaults

User Guidelines Starts traffic on the existing session.

ssd followed by sse applies any changes made to the session that are currently in the modified-running config.

Examples MG-IP-1:\Config\TDM_Over_Packet>**sse s02**

The request was updated successfully in modified running_config.

Use \c\rp to save the modified running_config

The command completed successfully.

SetTrapPort

Description	Sets the SNMP Trap port.
Abbreviation	**stp**
Syntax	**stp** <port>
Syntax Description	▪ <port> The SNMP port number, from 1 to 65535.
Defaults	The default option is a static IP
User Guidelines	When the port is changed, the new value is written to the configuration database. The change does not take effect until the next reset.
Examples	MG-IP-1:\Config\SNMP>**stp 3000** The request was updated successfully in active ConfigDB The configuration change will be activated after the next Replace&Reload (\c\rr

SetUserTimeout

Description Sets the length of time that a user connection will be maintained without user activity.

Abbreviation **sut**

Syntax **sut** <user_name> <timeout>

Syntax Description

- <user_name>

  The name of the defined user.

- <timeout>

  The length of time, in minutes. -1 indicates no timeout.

Defaults

User Guidelines After the timeout period passes with no user activity, the user connection will be logged out automatically. Use the GetUsers (gu) command to see the timeout settings for all users. A user must be in the admin group to change user timeouts.

Examples MG-IP-1:\Admin\Users>**sut oper 20**

The command completed successfully.

Use \c\rp to save the modified running_config